Electrical network protection

Sepam series 40
Merlin Gerin

Installation
and user's manual

2003

Sepam

a brand of Schneider Electric

Merlin Gerin

Contents

Contents

Presentation

MT10357

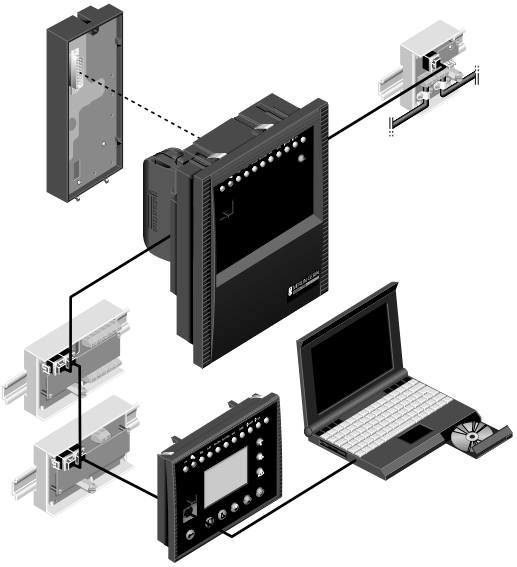

Sepam series 40 a modular solution.

Sepam series 40 with basic UMI and with fixed advanced UMI.

MT11212

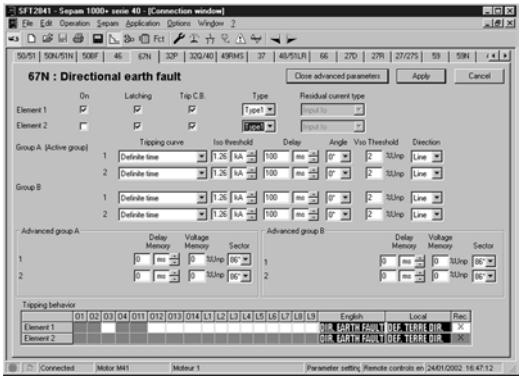

Example of an SFT2841 software screen (expert UMI).

The Sepam series 40 family of protection and metering units is designed for the operation of machines and electrical distribution networks of industrial installations and utility substations for all levels of voltage.
The Sepam series 40 family consists of simple, high-performing solutions, suited to demanding applications that call for current and voltage metering.

Sepam series 40 selection guide by application

Selection criteria			
Measurements	I and U	I and U	I and U
Specific protection functions		Directional earth fault	Directional earth fault and phase overcurrent
Applications			
Substation	S40	S41	S42
Transformer	T40		T42
Motor		M41	
Generator	G40		

Main functions

Protection

- phase overcurrent protection and earth fault protection with adjustable reset time and switching of the active group of settings and logic discrimination
- earth fault protection insensitive to transformer switching
- RMS thermal overload protection that takes into account external operating temperature and ventilation operating rates
- directional earth fault protection suitable for all earthing systems, isolated, compensated or impedant neutral
- directional phase overcurrent protection with voltage memory
- voltage and frequency protection functions (under/over, …).

Communication

Sepam series 40 is totally compatible with the **Modbus** communication standard. All the data needed for centralized equipment management from a remote monitoring and control system are available via the Modbus communication port:
- reading: all measurements, alarms, protection settings,...
- writing: breaking device remote control orders,... .

Diagnosis

3 types of diagnosis data for improved operation:
- network and machine diagnosis: tripping current, context of the last 5 trips, unbalance ratio, disturbance recording
- switchgear diagnosis: cumulative breaking current, trip circuit supervision, operating time
- diagnosis of the protection unit and additional modules: continuous self-testing, watchdog.

Control and monitoring

- circuit breaker program logic ready to use, requiring no auxiliary relays or additional wiring
- adaptation of control functions by a logic equation editor
- preprogrammed, customizable alarm messages on messages on UMI.

User Machine Interface

2 levels of User Machine Interface (UMI) are available according to the user's needs:
- **basic UMI:**
an economical solution for installations that do not require local operation (run via a remote monitoring and control system)
- **fixed or remote advanced UMI:**
a graphic LCD display and 9-key keypad are used to display the measurement and diagnosis values, alarm and operating messages and provide access to protection and parameter setting values, for installations that are operated locally.

Expert UMI software

The **SFT2841** PC software tool gives access to all the Sepam functions, with all the facilities and convenience provided by a Windows type environment.

Selection table

Functions		Type of Sepam						
		Substation			Transformer		Motor	Generator
Protection	**ANSI code**	**S40**	**S41**	**S42**	**T40**	**T42**	**M41**	**G40**
Phase overcurrent	50/51	4	4	4	4	4	4	4
Voltage-restrained phase overcurrent	50V/51V							1
Earth fault, sensitive earth fault	50N/51N 50G/51G	4	4	4	4	4	4	4
Breaker failure	50BF	1	1	1	1	1	1	1
Negative sequence / unbalance	46	2	2	2	2	2	2	2
Directional phase overcurrent	67			2		2		
Directional earth fault	67N/67NC		2	2		2	2	
Directional active overpower	32P		1	1			1	1
Directional reactive overpower	32Q/40						1	1
Thermal overload	49RMS				2	2	2	2
Phase undercurrent	37						1	
Excessive starting time, locked rotor	48/51LR/14						1	
Starts per hour	66						1	
Positive sequence undervoltage	27D						2	
Remanent undervoltage	27R						1	
Undervoltage (3)	27/27S	2	2	2	2	2	2	2
Overvoltage (3)	59	2	2	2	2	2	2	2
Neutral voltage displacement	59N	2	2	2	2	2	2	2
Negative sequence overvoltage	47	1	1	1	1	1	1	1
Overfrequency	81H	2	2	2	2	2	2	2
Underfrequency	81L	4	4	4	4	4	4	4
Recloser (4 cycles)	79	□	□	□				
Temperature monitoring (8 or 16 RTDs, 2 set points per RTD)	38/49T				□	□	□	□
Thermostat / Buchholz					□	□		
Metering								
Phase current I1, I2, I3 RMS, residual current I0		■	■	■	■	■	■	■
Average current I1, I2, I3, peak demand current IM1, IM2, IM3		■	■	■	■	■	■	■
Voltage U21, U32, U13, V1, V2, V3, residual voltage V0		■	■	■	■	■	■	■
Positive sequence voltage Vd / rotation direction, neg. seq. voltage Vi		■	■	■	■	■	■	■
Frequency		■	■	■	■	■	■	■
Active, reactive and apparent power P, Q, S Peak demand power PM,QM Power factor		■	■	■	■	■	■	■
Calculated active and reactive energy (±W.h, ±var.h)		■	■	■	■	■	■	■
Active and reactive energy by pulse counting (±W.h, ±var.h)		□	□	□	□	□	□	□
Temperature					□	□	□	□
Network and machine diagnosis								
Tripping context		■	■	■	■	■	■	■
Tripping current TripI1, TripI2, TripI3, TripI0		■	■	■	■	■	■	■
Unbalance ratio / negative sequence current Ii		■	■	■	■	■	■	■
Phase displacement φ0, φ1, φ2, φ3		■	■	■	■	■	■	■
Disturbance recording		■	■	■	■	■	■	■
Thermal capacity used					■	■	■	■
Remaining operating time before overload tripping					■	■	■	■
Waiting time after overload tripping					■	■	■	■
Running hours counter / operating time					■	■	■	■
Starting current and time							■	
Start inhibit time delay, number of starts before inhibition							■	
Switchgear diagnosis								
Cumulative breaking current		■	■	■	■	■	■	■
Trip circuit supervision		□	□	□	□	□	□	□
Number of operations, operating time, charging time		□	□	□	□	□	□	□
CT/VT supervision	60FL	■	■	■	■	■	■	■
Control and monitoring	**ANSI code**							
Circuit breaker / contactor control (1)	94/69	■	■	■	■	■	■	■
Latching / acknowledgment	86	■	■	■	■	■	■	■
Logic discrimination	68	□	□	□	□	□	□	□
Switching of groups of settings		■	■	■	■	■	■	■
Logic equation editor		■	■	■	■	■	■	■
Additional modules								
MET148-2 module - 8 temperature sensor inputs (2)					□	□	□	□
MSA141 module - 1 low level analog output		□	□	□	□	□	□	□
MES114 module or MES114E module or MES114F module- (10I/4O) - Logic inputs / outputs		□	□	□	□	□	□	□
ACE949-2 module (2-wire) or ACE959 (4-wire) RS 485 interface or ACE937 optical fibre interface		□	□	□	□	□	□	□

■ standard, □ according to parameter setting and MES114 or MET148-2 optional input/output modules
(1) *For shunt trip or undervoltage trip unit.*
(2) *2 modules possible.*
(3) *Exclusive choice, phase-to-neutral voltage or phase-to-phase voltage for each of the 2 units.*

Electrical characteristics

Analog inputs					
Current transformer		input impedance	< 0.001 Ω		
1 A or 5 A CT (with CCA630)		consumption	< 0.001 VA at 1 A		
1 A to 6250 A ratings			< 0.025 VA at 5 A		
		rated thermal withstand	3 In		
		1-second overload	100 In		
Voltage transformer		input impedance	> 100 kΩ		
220 V to 250 kV ratings		input voltage	100 to 230/√3 V		
		rated thermal withstand	230 V (1.7 Unp)		
		1-second overload	480 V (3.6 Unp)		
Temperature sensor input (MET148-2 module)					
Type of sensor		Pt 100	Ni 100 / 120		
Isolation from earth		none	none		
Current injected in sensor		4 mA	4 mA		
Logic inputs	**MES114**	**MES114E**		**MES114F**	
Voltage	24 to 250 V DC	110 to 125 V DC	110 V AC	220 to 250 V DC	220 to 240 V AC
Range	19.2 to 275 V DC	88 to 150 V DC	88 to 132 V AC	176 to 275 V DC	176 to 264 V AC
Frequency	-	-	47 to 63 Hz	-	47 to 63 Hz
Typical consumption	3 mA	3 mA	3 mA	3 mA	3 mA
Typical switching threshold	14 V DC	82 V DC	58 V AC	154 V DC	120 V AC
Control output relays (O1, O2, O11 contacts)					
Voltage	DC	24 / 48 V DC	127 V DC	220 V DC	
	AC (47.5 to 63 Hz)	-	-	-	100 to 240 V AC
Rated current		8 A	8 A	8 A	8 A
Breaking	resistive load	8 / 4 A	0.7 A	0.3 A	
capacity	L/R load < 20 ms	6 / 2 A	0.5 A	0.2 A	
	L/R load < 40 ms	4 / 1 A	0.2 A	0.1 A	
	resistive load	-	-	-	8 A
	p.f. load > 0.3	-	-	-	5 A
Making capacity		< 15 A for 200 ms			
Indication output relays (O3, O4, O12, O13, O14 contacts)					
Voltage	DC	24 / 48 V DC	127 V DC	220 V DC	
	AC (47.5 to 63 Hz)	-	-	-	100 to 240 V AC
Rated current		2 A	2 A	2 A	2 A
Breaking	L/R load < 20ms	2 / 1 A	0.5 A	0.15 A	
capacity	p.f. load > 0.3	-	-	-	1 A
Power supply					
	range	deactivated consumption (1)	max. consumption (1)	inrush current	
24 / 250 V DC	-20 % +10 %	3 to 6 W	7 to 11 W	< 28 A 100 µs	
110 / 240 V AC	-20 % +10 % 47.5 to 63 Hz	3 to 6 W	9 to 25 W	< 28 A 100 µs	
	brownout withstand	20 ms			
Analog output (MSA141 module)					
Current		4 - 20 mA, 0 - 20 mA, 0 - 10 mA			
Load impedance		< 600 Ω (wiring included)			
Accuracy		0.50 %			

(1) *According to configuration.*

Environmental characteristics

Electromagnetic comptability	IEC / EN standard	Level / Class	Value
Emission tests			
Disturbing field emission	EN 55022 / CISPR22	A	
Conducted disturbance emission	EN 55022 / CISPR22	B	
Immunity tests – Radiated disturbances			
Immunity to radiated fields	60255-22-3 / 61000-4-3	III	10 V/m
Electrostatic discharge	60255-22-2 / 61000-4-2	III	8 kV air 6 kV contact
Immunity tests – Conducted disturbances			
Immunity to conducted RF disturbances	61000-4-6	III	10 V
Fast transient bursts	60255-22-4 / 61000-4-4	IV	
1 MHz damped oscillating wave	60255-22-1	III	2.5 kV MC 1 kV MD
Impulse waves	61000-4-5	III	
Voltage interruptions	60255-11		100 % 20 ms
Mechanical robustness	**IEC / EN standard**	**Level / Class**	**Value**
In operation			
Vibrations	60255-21-1	2	1 Gn
Shocks	60255-21-2	2	10 Gn / 11 ms
Earthquakes	60255-21-3	2	
De-energised			
Vibrations	60255-21-1	2 (1)	2 Gn
Shocks	60255-21-2	2 (1)	30 Gn / 11 ms
Jolts	60255-21-2	2 (1)	20 Gn / 16 ms
Climatic withstand	**IEC / EN standard**	**Level / Class**	**Value**
In operation			
Exposure to cold	60068-2-1	Ad	-25 °C
Exposure to dry heat	60068-2-2	Bd	+70 °C
Continuous exposure to damp heat	60068-2-3	Ca	93 % HR; 40 °C 10 days
Temperature variation with specified variation rate	60068-2-14	Nb	–25 °C à +70 °C 5° C/min
Salt mist	60068-2-52	Kb / 2	
Influence of corrosion	60654-4		Clean industrial air
In storage (4)			
Exposure to cold	60068-2-1	Ab	-25 °C
Exposure to dry heat	60068-2-2	Bb	+70 °C
Continuous exposure to damp heat	60068-2-3	Ca	93 % RH; 40 °C 56 days
Safety	**IEC / EN standard**	**Level / Class**	**Value**
Enclosure safety tests			
Front panel tightness	60529	IP52	Other panels closed, except for rear panel IP20
	NEMA	Type 12 with gasket supplied	
Fire withstand	60695-2-11		650 °C with glow wire
Electrical safety tests			
Earth continuity	61131-2		30 A
1.2/50 µs impulse wave	60255-5		5 kV (2)
Power frequency dielectric withstand	60255-5		2 kV 1 mn (3)
Certification			
CE	generic standard EN 50081-2	European directives 89/336/EEC Electromagnétic Compatibility (EMC) Directive 92/31/EEC Amendment 92/68/EEC Amendment 73/23/EEC Low Voltage Directive 93/68/EEC Amendment	
UL - c UL us	UL508 - CSA C22.2 n° 14-95		File E212533
CSA	CSA C22.2 n° 94-M91 / n° 0.17-00		File E210625

***(1)** Results given for intrinsic withstand, excluding support equipment.*
***(2)** Except for communication: 3 kV in common mode and 1kV in differential mode.*
***(3)** Except for communication: 1 kVrms.*
***(4)** Sepam must be stored in its original packing.*

Contents

Characteristics

General settings	Selection	Range
Rated phase current In (sensor primary current)	2 or 3 x 1 A / 5 A CTs	1 A to 6250 A
	3 LPCT sensors	25 A to 3150 A (1)
Basic current Ib		0.4 to 1.3 In
Residual current In0	sum of 3 phase currents	see rated phase current In
	CSH120 or CSH200 core balance CT	2 A, 5 A or 20 A rating
	1 A / 5 A CT + CSH30 interposing ring CT	1 A to 6250 A (CT primary) In0 = In CT
	1 A / 5 A CT + CSH30 interposing ring CT sensibility x 10	1 A to 6250 A (CT primary) In0 = In CT/10
	core balance CT + ACE990 (the core bal. CT ratio 1/n should be such that: 50 ⩽ n ⩽ 1500)	according to current to be monitored and use of ACE990
Rated primary phase-to-phase voltage Unp (Vnp: Rated primary phase-to-neutral voltage: Vnp = Unp / $\sqrt{3}$		220 V to 250 kV
Rated secondary phase-to-phase voltage Uns	3 VTs: V1, V2, V3	100, 110, 115, 120, 200, 230 V
	2 VTs: U21, U32	100, 110, 115, 120 V
	1 VT: U21	100, 110, 115, 120 V
Accumulated energy by pulse metering	increments active energy	0.1 kW.h to 5 MW.h
	increments reactive energy	0.1 kvar.h to 5 Mvar.h
Frequency		50 Hz or 60 Hz

Metering functions	Range	Accuracy (2)	MSA141 (3)
Phase current	0.1 to 1.5 In	±0.5 % typical ±2 % from 0.3 to 1.5 In ±5 % if < 0.3 In	■
Residual current	0.1 to 1.5 In0	±1 % typical ±2 % from 0.3 to 1.5 In0 ±5 % if < 0.3 In0	■
Average current and peak demand phase current	0.1 to 1.5 In	±0.5 % typical ±2 % from 0.3 to 1.5 In ±5 % if < 0.3 In	
Phase-to-phase or phase-to-neutral voltage	0.05 to 1.2 Unp 0.05 to 1.2 Vnp	±0.5 % typical ±1 % from 0.5 to 1.2 Unp or Vnp ±2 % from 0.05 to 0.5 Unp or Vnp	■
Residual voltage	0.015 to 3 Vnp	±1 % from 0.5 to 3 Vnp ±2 % from 0.05 to 0.5 Vnp ±5 % from 0.015 to 0.05 Vnp	
Positive sequence voltage, negative sequence voltage	0.05 to 1.5 Vnp	±2 % to Vnp	
Frequency	25 to 65 Hz	±0.02 Hz	■
Active power	1.5 % Sn to 999 MW	±1 % typical	■
Reactive power	1.5 % Sn to 999 Mvar	±1 % typical	■
Apparent power	1.5 % Sn to 999 MVA	±1 % typical	■
Power factor	-1 to 1 (CAP / IND)	±1 % typical	
Peak demand active power	1.5 % Sn to 999 MW	±1 % typical	
Peak demand reactive power	1.5 % Sn to 999 Mvar	±1 % typical	
Active energy	0 to 2.1 10^8 MW.h	±1 %, ±1 digit	
Reactive energy	0 to 2.1 10^8 Mvar.h	±1 %, ±1 digit	
Temperature	-30 °C to +200 °C or -22 °F to 392 °F	±1 °C from +20 to +140 °C ±2 °C	■
Network diagnosis assistance functions			
Phase tripping current	0.1 to 40 In	±5 %	
Earth fault tripping current	0.1 to 20 In0	±5 %	
Unbalance / negative sequence current Ii	10 % to 500 % Ib	±2 %	
Machine operation assistance functions			
Running hours counter / operating time	0 to 65535 hours	±1 % or ±0.5 h	
Thermal capacity used	0 to 800 % (100 % for phase I = Ib)	±1 %	■
Remaining operating time before overload tripping	0 to 999 mn	±1 mn	
Waiting time after overload tripping	0 to 999 mn	±1 mn	
Starting current	1.2 Ib to 24 In	±5 %	
Starting time	0 to 300 s	±10 ms	
Start inhibit time delay	0 to 360 mn	±1 mn	
Number of starts before inhibition	0 to 60	1	
Cooling time constant	5 mn to 600 mn	±5 %	
Switchgear diagnosis assistance functions			
Cumulative breaking current	0 to 65535 kA^2	±10 %	
Number of operations	0 to 65535	1	
Operating time	20 to 100 ms	±1 ms	
Charging time	1 to 20 s	±0.5 s	

(1) *Table of In values in Amps: 25, 50, 125, 133, 200, 250, 320, 400, 500, 630, 666, 1000, 1600, 2000, 3150.*
(2) *In reference conditions (IEC 60255-6), typical at In or Un.*
(3) *Measurements available in analog format according to parameter setting and MSA141 module.*

Phase current
Residual current

Phase current

Operation

This function gives the RMS value of the phase currents:
- I1: phase 1 current
- I2: phase 2 current
- I3: phase 3 current.

It is based on RMS current measurement and takes into account harmonics up to number 17.

Readout

The measurements may be accessed via:
- the advanced UMI display unit by pressing the key
- the display of a PC with the SFT2841 software
- the communication link
- an analog converter with the MSA141 option.

Characteristics

Measurement range	0.1 to 1.5 In (1)
Unit	A or kA
Accuracy	±0.5 % typical (2) ±2 % from 0.3 to 1.5 In ±5 % if < 0.3 In
Display format (3)	3 significant digits
Resolution	0.1 A
Refresh interval	1 second (typical)

(1) *In rated current set in the general settings.*
(2) *At In, in reference conditions (IEC 60255-6).*
(3) *Display of values: 0.2 to 40 In.*

Residual current

Operation

This operation gives the RMS value of the residual current I0.
It is based on measurement of the fundamental component.

Readout

The residual current measured (I0), and the residual current calculated by the sum of the phase currents (IoΣ) may be accessed via:
- the advanced UMI display unit by pressing the key
- the display of a PC with the SFT2841 software
- the communication link
- an analog converter with the MSA141 option.

Characteristics

Measurement range		
Connection to 3 phase CTs:		0.1 to 1.5 In0 (1)
Connection to 1 CT with CSH30 interposing ring CT		0.1 to 1.5 In0 (1) (3)
Connection to core balance CT with ACE990		0.1 to 1.5 In0 (1)
Connection to CSH residual current sensor	2 A rating	0.2 to 3 A (3)
	5 A rating	0.5 to 7.5 A (3)
	20 A rating	2 to 30 A (3)
Unit		A or kA
Accuracy (2)		±1 % typical at In0 ±2 % from 0.3 to 1.5 In0 ±5 % if < 0.3 In0
Display format		3 significant digits
Resolution		0.1 A
Refresh interval		1 second (typical)

(1) *In0 rated current set in the general settings.*
(2) *In reference conditions (IEC 60255-6), excluding sensor accuracy.*
(3) *In0 = InCT or In0 = InCT/10 according to setting.*

Average current and peak demand currents

Operation

This function gives:

■ the average RMS current for each phase that has been obtained for each integration interval

■ the greatest average RMS current value for each phase that has been obtained since the last reset.

The values are refreshed after each "integration interval", an interval that may be set from 5 to 60 mn, and are saved in the event of a power failure.

Readout

The measurements may be accessed via:

■ the advanced UMI display unit by pressing the key

■ the display of a PC with the SFT2841 software

■ the communication link.

Resetting to zero:

■ press the clear key on the advanced UMI display unit when a peak demand current is displayed

■ via the clear command in the SFT2841 software

■ via the communication link (remote control order TC6).

Characteristics

Measurement range	0.1 to 1.5 In (1)
Unit	A or kA
Accuracy	±0.5 % typical (2) ±2 % from 0.3 to 1.5 In ±5 % if < 0.3 In
Display format	3 significant digits
Resolution	0.1 A
Display format	5, 10, 15, 30, 60 minutes

(1) *In rated current set in the general settings.*

(2) *At In, in reference conditions (IEC 60255-6).*

Phase-to-phase voltage
Phase to neutral voltage

Phase-to-phase voltage

Operation

This function gives the RMS value of the 50 or 60 Hz component of phase-to-phase voltages (according to voltage sensor connections):

- U21: voltage between phases 2 and 1
- U32: voltage between phases 3 and 2
- U13: voltage between phases 1 and 3.

It is based on measurement of the fundamental component.

Readout

The measurements may be accessed via:

- the advanced UMI display unit by pressing the key
- the display of a PC with the SFT2841 software
- the communication link
- an analog converter with the MSA141 option.

Characteristics

Measurement range	0.05 to 1.2 Unp (1)
Unit	V or kV
Accuracy	±0.5 % typical (2) ±1 % from 0.5 to 1.2 Unp ±2 % from 0.05 to 0.5 Unp
Display format	3 significant digits
Resolution	1 V
Refresh interval	1 second (typical)

(1) *Un nominal rating set in the general settings.*
(2) *At Unp, in reference conditions (IEC 60255-6).*

Phase-to-neutral voltage

Operation

This function gives the RMS value of the 50 or 60 Hz component of phase-to-neutral voltages:

- V1: phase 1 phase-to-neutral voltage
- V2: phase 2 phase-to-neutral voltage
- V3: phase 3 phase-to-neutral voltage.

It is based on measurement of the fundamental component.

Readout

The measurements may be accessed via:

- the advanced UMI display unit by pressing the key
- the display of a PC with the SFT2841 software
- the communication link
- an analog converter with the MSA141 option.

Characteristics

Measurement range	0.05 to 1.2 Vnp (1)
Unit	V or kV
Accuracy	±0.5 % typical (2) ±1 % from 0.5 to 1.2 Vnp ±2 % from 0.05 to 0.5 Vnp
Display format	3 significant digits
Resolution	1 V
Refresh interval	1 second (typical)

(1) *Vnp: primary rated phase-to-neutral voltage (Vnp = Unp/$\sqrt{3}$).*
(2) *At Vnp in reference conditions (IEC 60255-6).*

Residual voltage
Positive sequence voltage

Residual voltage

Operation

This function gives the value of the residual voltage V0 = (V1 + V2 + V3).
V0 is measured:
- by taking the internal sum of the 3 phase voltages
- by an open star / delta VT.

It is based on measurement of the fundamental component.

Readout

The measurement may be accessed via:
- the advanced UMI display unit by pressing the key
- the display of a PC with the SFT2841 software
- the communication link.

Characteristics

Measurement range	0.015 Vnp to 3 Vnp (1)
Unit	V or kV
Accuracy	±1 % from 0.5 to 3 Vnp ±2 % from 0.05 to 0.5 Vnp ±5 % from 0.015 to 0.05 Vnp
Display format	3 significant digits
Resolution	1 V
Refresh interval	1 second (typical)

(1) *Vnp: primary rated phase-to-neutral voltage (Vnp = Unp/√3).*

Positive sequence voltage

Operation

This function gives the calculated value of the positive sequence voltage Vd.

Readout

The measurement may be accessed via:
- the advanced UMI display unit by pressing the key
- the display of a PC with the SFT2841 software
- the communication link.

Characteristics

Measurement range	0.05 to 1.2 Vnp (1)
Unit	V or kV
Accuracy	±2 % at Vnp
Display format	3 significant digits
Resolution	1 V
Refresh interval	1 second (typical)

(1) *Vnp: primary rated phase-to-neutral voltage (Vnp = Unp/√3).*

Negative sequence voltage
Frequency

Negative sequence voltage

Operation

This function gives the calculated value of the negative sequence voltage Vi.

Readout

The measurement may be accessed via:
- the advanced UMI display unit by pressing the key
- the display of a PC with the SFT2841 software
- the communication link.

Characteristics

Measurement range	0.05 to 1.2 Vnp (1)
Unit	V or kV
Accuracy	±2 % at Vnp
Display format	3 significant digits
Resolution	1 V
Refresh interval	1 second (typical)

(1) *Vnp: primary rated phase-to-neutral voltage (Vnp = Unp/√3).*

Frequency

Operation

This function gives the frequency value.
Frequency is measured via the following:
- based on U21, if only one phase-to-phase voltage is connected to the Sepam
- based on positive sequence voltage, if the Sepam includes U21 and U32 measurements.

Frequency is not measured if:
- the voltage U21 or positive sequence voltage Vd is less than 40 % of Un
- the frequency is outside the measurement range.

Readout

The measurement may be accessed via:
- the advanced UMI display unit by pressing the key
- the display of a PC with the SFT2841 software
- the communication link
- an analog converter with the MSA141 option.

Characteristics

Rated frequency	50 Hz, 60 Hz
Range	25 to 65 Hz
Accuracy (1)	±0.02 Hz
Display format	3 significant digits
Resolution	0.01 Hz (2)
Refresh interval	1 second (typical)

(1) *At Unp in reference conditions (IEC 60255-6).*
(2) *On SFT2841.*

Active, reactive and apparent power

Operation

This function gives the power values:
- P active power = $\sqrt{3}$.U.I cos φ
- Q reactive power = $\sqrt{3}$.U.I.sin φ
- S apparent power = $\sqrt{3}$.U.I.

The function measures the active and reactive power in 3-wire 3-phase arrangements by means of the two wattmeter method. The powers are obtained based on the phase-to-phase voltages U21 and U32 and the phase currents I1 and I3.
When only the voltage U21 is connected, P and Q are calculated assuming that the system voltage is balanced.

According to standard practice, it is considered that:
- for the outgoing circuit (1) :
  - power exported by the busbar is positive
  - power supplied to the busbar is negative

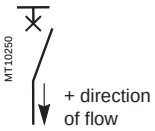

- for the incoming circuit (1) :
  - power supplied to the busbar is positive
  - power exported by the busbar is negative.

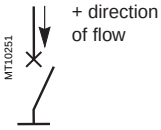

Readout

The measurements may be accessed via:
- the advanced UMI display unit by pressing the key
- the display of a PC with the SFT2841 software
- the communication link
- an analog converter with the MSA141 option.

(1) *Choice to be set in the general settings.*

Characteristics

	Active power P	Reactive power Q
Measurement range	±(1.5 % Sn at 999 MW) (1)	±(1.5 % Sn at 999 Mvar) (1)
Unit	kW, MW	kvar, Mvar
Accuracy	±1 % typical (2)	±1 % typical (2)
Display format	3 significant digits	3 significant digits
Resolution	0.1 kW	0.1 kvar
Refresh interval	1 second (typical)	1 second (typical)

	Apparent power S
Measurement range	1.5 % Sn at 999 MVA (1)
Unit	kVA, MVA
Accuracy	±1 % typical (2)
Display format	3 significant digits
Resolution	0.1 kVA
Refresh interval	1 second (typical)

(1) *Sn = $\sqrt{3}$Unp.In.*
(2) *At In, Unp, cos φ > 0.8 in reference conditions (IEC 60255-6).*

Peak demand active and reactive power Power factor (cos φ)

Peak demand active and reactive power

Operation

This function gives the greatest average active or reactive power value since the last reset.
The values are refreshed after each "integration interval", an interval that may be set from 5 to 60 mn (common interval with peak demand phase currents). The values are saved in the event of a power failure.

Readout

The measurements may be accessed via:
- the advanced UMI display unit by pressing the key
- the display of a PC with the SFT2841 software
- the communication link.

Resetting to zero

- press the **clear** key on the advanced UMI display unit when a peak demand is displayed
- via the **clear** command in the SFT2841 software
- via the communication link (remote control order TC6).

Characteristics

	Active power P	Reactive power Q
Measurement range	±(1.5 % Sn at 999 MW) (1)	±(1.5 % Sn at 999 Mvar) (1)
Unit	kW, MW	kvar, Mvar
Accuracy	±1 % typical (2)	±1 % typical (2)
Display format	3 significant digits	3 significant digits
Resolution	0.1 kW	0.1 kvar
Integration interval	5, 10, 15, 30, 60 mn	5, 10, 15, 30, 60 mn

(1) Sn = $\sqrt{3}$Unp.In.
(2) At In, Unp, cos φ > 0.8 in reference conditions (IEC 60255-6).

Power factor (cos φ)

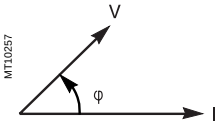

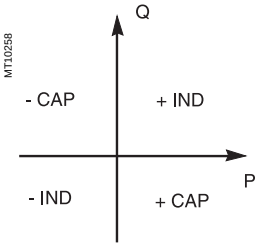

Operation

The power factor is defined by:

$$\cos\varphi = P/\sqrt{P^2 + Q^2}$$

It expresses the phase displacement between the phase currents and phase-to-neutral voltages.
The + and - signs and **IND** (inductive) and **CAP** (capacitive) indications give the direction of power flow and the type of load.

Readout

The measurement may be accessed via:
- the advanced UMI display unit by pressing the key
- the display of a PC with the SFT2841 software
- the communication link.

Characteristics

Measurement range	-1 to 1 IND/CAP
Accuracy (1)	±0.01 typical
Display format	3 significant digits
Resolution	0.01
Refresh interval	1 second (typical)

(1) At In, Unp, cos φ > 0.8 in reference conditions (IEC 60255-6).

Active and reactive energy

Accumulated active and reactive energy

Operation

This function gives the following for the active and reactive energy values:
- accumulated energy conveyed in one direction
- accumulated energy conveyed in the other direction.

It is based on measurement of the fundamental component.
The accumulated energy values are saved in the event of a power failure.

Readout

The measurements may be accessed via:
- the advanced UMI display unit by pressing the key
- the display of a PC with the SFT2841 software
- the communication link.

Characteristics

	Active energy	Reactive energy
Metering capacity	0 to 2.1 10^8 MW.h	0 to 2.1 10^8 Mvar.h
Unit	MW.h	Mvar.h
Accuracy	±1 % typical (1)	±1 % typical (1)
Display format	10 significant digits	10 significant digits
Resolution	0.1 MW.h	0.1 Mvar.h

(1) *At In, Unp, cos φ > 0.8 in reference conditions (IEC 60255-6).*

Accumulated active and reactive energy by pulse metering

Operation

This function is used for energy metering via logic inputs. Energy incrementing is associated with each input (one of the general parameters to be set). Each input pulse increments the meter. 4 inputs and 4 accumulated energy metering options are available:
- positive and negative active energy
- positive and negative reactive energy.

The accumulated active and reactive energy values are saved in the event of a power failure.

Readout

- the display of a PC with the SFT2841 software
- the communication link.

Characteristics

	Active energy	Reactive energy
Metering capacity	0 to 2.1 10^8 MW.h	0 to 2.1 10^8 Mvar.h
Unit	MW.h	Mvar.h
Display format	10 significant digits	10 significant digits
Resolution	0.1 MW.h	0.1 Mvar.h
Increment	0.1 kW.h to 5 MW	0.1 kvar.h to 5 Mvar.h
Impulse	15 ms min.	15 ms min.

Temperature

Operation

This function gives the temperature value measured by resistance temperature detectors (RTDs):

- platinum Pt100 (100 Ω at 0 °C) in accordance with the CEI 60751 and DIN 43760 standards
- nickel 100 Ω or 120 Ω (at 0 °C).

Each RTD channel gives one measurement:
tx = RTD x temperature.
The function also indicates RTD faults:

- RTD disconnected (tx > 205 °C)
- RTD shorted (tx < -35 °C).

In the event of a fault, display of the value is inhibited.
The associated monitoring function generates a maintenance alarm.

Readout

The measurement may be accessed via:

- the advanced UMI display unit by pressing the key, in °C or in °F
- the display of a PC with the SFT2841 software
- the communication link
- an analog converter with the MSA141 option.

Characteristics

Range	-30 °C to +200 °C	or	-22 °F to +392 °F
Resolution	1 °C or 1 °F		
Accuracy (1)	±1 °C from +20 to +140 °C ±2 °C from -30 to +20 °C ±2 °C from +140 to +200 °C		
Refresh interval	5 seconds (typical)		

Accuracy derating according to wiring: see chapter "installation of MET148-2 module page 6/22.

Tripping context
Tripping current

Tripping context

Operation

This function gives the values of physical units at the time of tripping to enable analysis of the cause of the fault.
Values available on the advanced UMI:
- tripping currents
- residual currents (based on sum of phase currents and measured on I0 input)
- phase-to-phase voltages
- residual voltage
- frequency
- active power
- reactive power.

The expert UMI may be used to obtain the following in addition to the values available on the advanced UMI:
- phase-to-neutral voltages
- negative sequence voltage
- positive sequence voltage.

The values for the last five trips are stored with the date and time of tripping. They are saved in the event of a power failure.

Readout

The measurements may be accessed via:
- the advanced UMI display unit by pressing the key
- the display of a PC with the SFT2841 software
- the communication link.

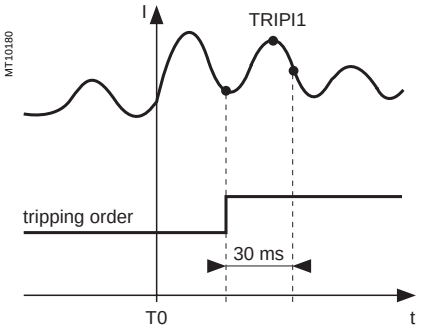

Tripping current (TRIPI1) acquisition.

Tripping current

Operation

This function gives the RMS value of currents at the prospective time of the last trip:
- TRIPI1: phase 1 current
- TRIPI2: phase 2 current
- TRIPI3: phase 3 current.

It is based on measurement of the fundamental component.
This measurement is defined as the maximum RMS value measured during a 30 ms interval after the activation of the tripping contact on output O1.

Readout

The measurements may be accessed via:
- the advanced UMI display unit by pressing the key
- the display of a PC with the SFT2841 software
- the communication link.

Characteristics

Measurement range	0.1 to 40 In (1)
Unit	A or kA
Accuracy	±5 % ±1 digit
Display format	3 significant digits
Resolution	0.1 A

(1) *In rated current set in the general settings.*

Negative sequence / unbalance

Operation

This function gives the negative sequence component: **T = Ii/Ib**
The negative sequence current is determined based on the phase currents:

- 3 phases

$$\vec{I}i = \frac{1}{3} \times (\vec{I}1 + a^2\vec{I}2 + a\vec{I}3)$$

with $a = e^{j\frac{2\pi}{3}}$

- 2 phases

$$\vec{I}i = \frac{1}{\sqrt{3}} \times (\vec{I}1 - a^2\vec{I}3)$$

with $a = e^{j\frac{2\pi}{3}}$

These 2 formulas are equivalent when there is no earth fault.

Readout

The measurements may be accessed via:

- the advanced UMI display unit by pressing the key
- the display of a PC with the SFT2841 software
- the communication link.

Characteristics

Measurement range	10 to 500 %
Unit	% Ib
Accuracy	±2 %
Display format	3 significant digits
Resolution	1 %
Refresh interval	1 second (typical)

Phase displacement φ0
Phase displacement φ1, φ2, φ3

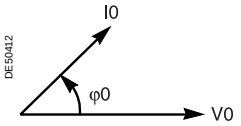

Phase displacement φ0.

Phase displacement φ0

Operation

This function give the phase displacement measured between the residual voltage and residual current in the trigonometric sense (see diagram).
The measurement is useful during commissioning to check that the directional earth fault protection unit is connected correctly.

Two values are available:

- φ0, angle with measured I0
- φ0Σ, angle with I0 calculated by sum of phase currents.

Readout

The measurements may be accessed via:

- the advanced UMI display unit by pressing the key
- the display of a PC with the SFT2841 software
- the communication link.

Characteristics

Measurement range	0 to 359°
Resolution	1°
Accuracy	±2°
Refresh interval	2 seconds (typical)

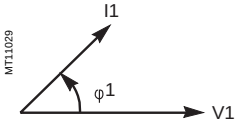

Phase displacement φ1.

Phase displacement φ1, φ2, φ3

Operation

This function gives the phase displacement between the V1, V2, V3 voltages and I1, I2, I3 currents respectively, in the trigonometric sense (see diagram). The measurements are used when Sepam is commissioned to check that the voltage and current inputs are wired correctly. It does not operate when only the U21 voltage is connected to Sepam.

Readout

The measurements may be accessed via:

- the advanced UMI display unit by pressing the key
- the display of a PC with the SFT2841 software
- the communication link.

Characteristics

Measurement range	0 to 359°
Resolution	1°
Accuracy	±2°
Refresh interval	2 seconds (typical)

Disturbance recording

Operation

This function is used to record analog signal and logical states.
Record storage is activated according to parameter setting by a triggering event.
The stored event begins before the triggering event and continues afterwards.
The record comprises the following information:
- values sampled from the different signals
- date
- characteristics of the recorded channels.

The duration and number of records may be set using the SFT2841 software tool.
The files are recorded in FIFO (First In First Out) type shift storage: when the maximum number of records is reached, the oldest record is erased when a new record is triggered.
The disturbance records are lost when the device is switched on and when the logical equations or alarm messages are changed.

Transfer

Files may be transferred locally or remotely:
- locally: using a PC which is connected to the front panel connector and has the SFT2841 software tool
- remotely: using a software tool specific to the remote monitoring and control system.

Recovery

The signals are recovered from a record by means of the SFT2826 software tool.

Principle

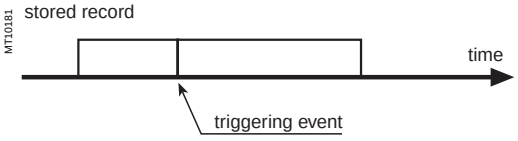

Characteristics

Record content	Set-up file: date, channel characteristics, measuring chain transformer ratio Sample file: 12 values per period/recorded signal
Analog signals (2) recorded	4 current channels (I1, I2, I3, I0) 3 voltage channels (V1, V2, V3 or U21, U32, V0)
Logical states recorded	10 logic inputs, logic outputs O1 to O4, pick-up, 1 data item configurable by the logical equation editor
Number of records stored	1 to 19
Total duration of a record	1 s to 10 s The total records plus one should not exceed 20 s at 50 Hz and 16 s at 60 Hz. Examples (at 50 Hz) : 1 x 10 s record 3 x 5 s records 19 x 1 s records
Periods before triggering event (1)	0 to 99 periods
File format	COMTRADE 97

(1) *According to parameter setting with the SFT2841 software and factory-set to 36 periods.*
(2) *According to the type of sensors.*

Thermal capacity used
Cooling time constant

Thermal capacity used

Operation

The thermal capacity used is calculated by the thermal protection function.
The thermal capacity used is related to the load. The thermal capacity used measurement is given as a percentage of the rated thermal capacity.

Saving of thermal capacity used

The thermal capacity used is saved in the event of a Sepam power cut. The saved value is used again after a Sepam power outage.

Readout

The measurements may be accessed via:
- the advanced UMI display unit by pressing the key
- the display of a PC with the SFT2841 software
- the communication link
- an analog converter with the MSA141 option.

Characteristics

Measurement range	0 to 800 %
Unit	%
Display format	3 significant digits
Resolution	1 %
Refresh interval	1 second (typical)

Cooling time constant

Operation

The cooling time constant T2 of the equipment being monitored (transformer, motor or generator) is estimated by the thermal overload protection function.
It is calculated each time the equipment operates for a sufficiently long period, followed by a shutdown (I < 0.1 Ib) and temperature stabilization phase.
The calculation is based on the temperature measured by RTDs 1, 2 and 3 (stator sensors for motors and generators) or by RTDs 1, 3 and 5 (primary winding sensors for transformers). For greater accuracy, it is advisable for the ambient temperature to be measured by RTD 8.
If "other applications" is chosen in the RTD assignment table, T2 is not estimated.
Two measurements are available, one for each thermal operating rate of the monitored equipment.

Readout

The measurements may be accessed via:
- the advanced UMI display unit by pressing the key
- the display of a PC with the SFT2841 software
- the communication link.

Characteristics

Measurement range	5 to 600 mn
Unit	mn
Resolution	1 mn
Accuracy	±5 %
Display format	3 significant digits

Operating time before tripping Waiting time after tripping

Remaining operating time before overload tripping

Operation

The time is calculated by the thermal protection function. It depends on the thermal capacity used.

Readout

The measurements may be accessed via:
- the advanced UMI display unit by pressing the key
- the display of a PC with the SFT2841 software
- the communication link.

Characteristics

Measurement range	0 to 999 mn
Unit	mn
Display format	3 significant digits
Resolution	1 mn
Refresh interval	1 second (typical)

Waiting time after overload tripping

Operation

The time is calculated by the thermal protection function. It depends on the thermal capacity used.

Readout

The measurements may be accessed via:
- the advanced UMI display unit by pressing the key
- the display of a PC with the SFT2841 software
- the communication link.

Characteristics

Measurement range	0 to 999 mn
Unit	mn
Display format	3 significant digits
Resolution	1 mn
Refresh period	1 second (typical)

Running hours counter and operating time
Starting current and starting/ overload time

Running hours counter and operating time

The counter gives the running total of time during which the protected device (motor, generator or transformer) has been operating (I > 0.1 Ib). The initial counter value may be modified using the SFT2841 software.
The counter is saved in the event of an auxiliary power failure.

Readout

The measurements may be accessed via:
- the advanced UMI display unit by pressing the key
- the display of a PC with the SFT2841 software
- the communication link.

Characteristics

Range	0 to 65535
Unit	hours

Starting current and starting/overload time

Operation

The starting/overload time is the time between the moment at which one of the 3 phase currents exceeds 1.2 Ib and the moment at which the 3 currents drop back below 1.2 Ib.
The maximum phase current obtained during this period is the starting/overload current.
The 2 values are saved in the event of an auxiliary power failure.

Readout

The measurements may be accessed via:
- the advanced UMI display unit by pressing the key
- the display of a PC with the SFT2841 software
- the communication link.

Characteristics

Starting/overload time	
Measurement range	0 to 300 s
Unit	s or ms
Display format	3 significant digits
Resolution	10 ms or 1 digit
Refresh interval	1 second (typical)
Starting/overload current	
Measurement range	1.2 Ib to 24 In (1)
Unit	A or kA
Display format	3 significant digits
Resolution	0.1 A or 1 digit
Refresh interval	1 second (typical)

(1) *Or 65.5 kA.*

Number of starts before inhibition
Start inhibit time delay

Number of starts before inhibition

Operation

The number of starts allowed before inhbition is calculated by the number of starts protection function.
The number of starts depends on the thermal state of the motor.

Readout

The measurements may be accessed via:
- the advanced UMI display unit by pressing the key
- the display of a PC with the SFT2841 software
- the communication link.

Resetting to zero

The number of starts counters may be reset to zero as follows, after the entry of a password:
- on the advanced UMI display unit by pressing the **"clear"** key
- on the display of a PC with the SFT2841 software.

Characteristics

Measurement range	0 to 60
Unit	none
Display format	3 significant digits
Resolution	1
Refresh interval	1 second (typical)

Start inhibit time delay

Operation

The time delay is calculated by the number of starts protection function.
If the number of starts protection function indicates that starting is inhibited, the time given represents the waiting time before starting is allowed.

Readout

The number of starts and waiting time may be accessed via:
- the advanced UMI display unit by pressing the key
- the display of a PC with the SFT2841 software
- the communication link.

Characteristics

Measurement range	0 to 360 mn
Unit	mn
Display format	3 significant digits
Resolution	1 mn
Refresh interval	1 second (typical)

Cumulative breaking current and number of operations

Cumulative breaking current

Operation

This function gives the cumulative breaking current in $(kA)^2$ for five current ranges.
It is based on measurement of the fundamental component.
The current ranges displayed are:

- 0 < I < 2 In
- 2 In < I < 5 In
- 5 In < I < 10 In
- 10 In < I < 40 In
- I > 40 In.

This function gives the cumulative breaking current in $(kA)^2$ for five current ranges.
Each value is saved in the event of an auxiliary power failure.
Refer to switchgear documentation for use of this information.

Number of operations

The function also gives the total number of breaking device operations.
It is activated by tripping orders (O1 relay).
The number of operations is saved in the event of an auxiliary power failure.

Readout

The measurements may be accessed via:

- the advanced UMI display unit by pressing the key
- the display of a PC with the SFT2841 software
- the communication link.

The initial values may be introduced using the SFT2841 software tool to take into account the real state of a used breaking device.

Characteristics

Cumulative breaking current $(kA)^2$	
Range	0 to 65535 $(kA)^2$
Unit	primary $(kA)^2$
Resolution	1$(kA)^2$
Accuracy (1)	±10 % ±1 digit
Number of operations	
Range	0 to 65535

(1) *At In, in reference conditions (IEC 60255-6).*

Operating time
Charging time

Operating time

Operation

This function gives the value of the opening operating time of a breaking device [(1)] and change of status of the device open position contact connected to the I11 input [(2)]
The function is inhibited when the input is set for AC voltage [(3)].
The value is saved in the event of an auxiliary power failure.

Readout

The measurement may be accessed via:
- the advanced UMI display unit by pressing the key
- the display of a PC with the SFT2841 software
- the communication link.

(1) *Refer to switchgear documentation for use of this information.*
(2) *Optional MES module.*
(3) *Optional MES114E or MES114F modules.*

Characteristics

Measurement range	20 to 100
Unit	ms
Accuracy	±1 ms typical
Display format	3 significant digits
Resolution	1 ms

Charging time

Operation

This function gives the value of the breaking device [(1)] operating mechanism charging time, determined according to the device closed position status change contact and the end of charging contact connected to the Sepam logic inputs [(2)].
The value is saved in the event of an auxiliary power failure.

Readout

The measurement may be accessed via:
- the advanced UMI display unit by pressing the key
- the display of a PC with the SFT2841 software
- the communication link.

(1) *Refer to switchgear documentation for use of this information.*
(2) *Optional MES114 or MES114E or MES114F modules.*

Characteristics

Measurement range	1 to 20
Unit	s
Accuracy	±0.5 sec
Display format	3 significant digits
Resolution	1s

VT supervision
ANSI code 60FL

Operation

The VT (Voltage Transformer) supervision function is used to supervise the complete phase and residual voltage measurement chain:
- voltage transformers
- VT connection to Sepam
- Sepam voltage analog inputs.

The function processes the following failures:
- partial loss of phase voltages, detected by:
  - presence of negative sequence voltage
  - and absence of negative sequence current
- loss of all phase voltages, detected by:
  - presence of current on one of the three phases
  - and absence of all measured voltages
- tripping of the phase VT (and/or residual VT) protection relay, detected by the acquisition on a logic input of the fuse melting contact or auxiliary contact of the circuit breaker protecting the VTs
- other types of failures may be processed using the logical equation editor.

The "Phase voltage fault" and "Residual voltage fault" information disappears automatically when the situation returns to normal, i.e. as soon as:
- the cause of the fault has disappeared
- and all of the measured voltages are present.

Use of circuit breaker closed information

The "circuit breaker closed" information is used to detect the loss of one, two or three voltages, if it is connected to a logic input.
If the "circuit breaker closed" information is not connected to a logic input, the detection of VT faults due to the loss of one, two or three voltages is not determined by the position of the circuit breaker.

Block diagram

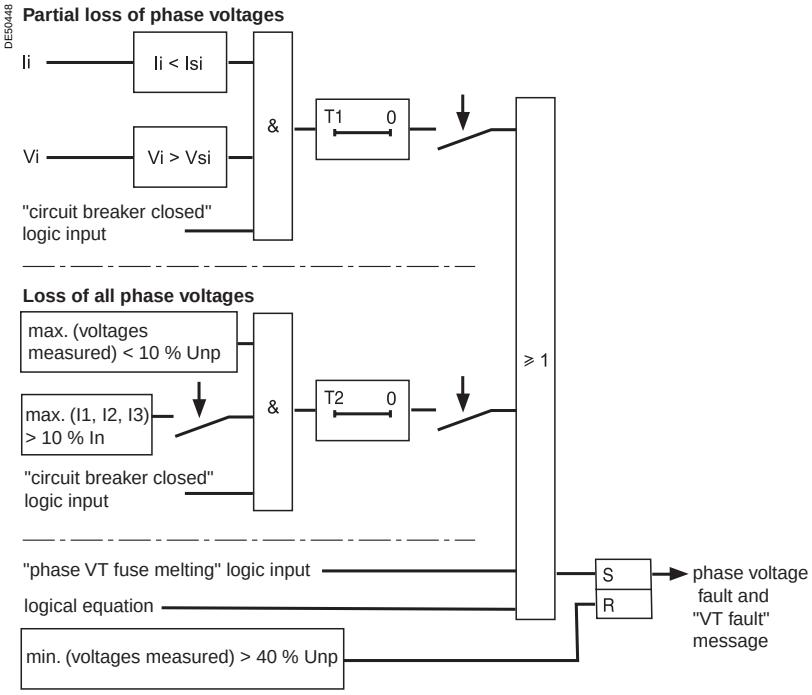

Detection of phase voltage fault.

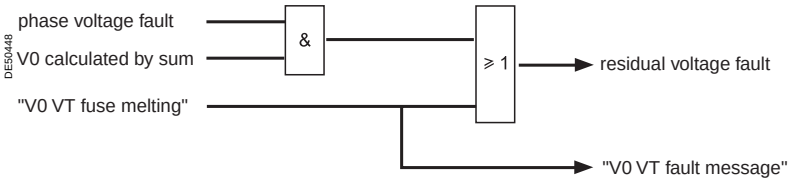

Detection of residual voltage fault.

VT supervision
ANSI code 60FL

Consequences of a VT fault on protection functions

A "Phase voltage fault" affects the following protection functions:
- 27, 27S, 32P, 32Q/40, 47, 51V
- 59, only in cases where the protection function is set up for phase-to-neutral overvoltage, when the voltages are measured by two phase VTs + V0 VT
- 67

A "residual voltage fault" affects the following protection functions:
- 59N
- 67N/67NC.

The behavior of the protection functions in the event of a "Phase voltage fault" or "Residual voltage fault" is to be set up and the following choices are proposed:
- for protection functions 27/27S, 32P, 32Q/40, 47, 51V, 59 and 59N: inhibition or no inhibition
- for protection function 67: inhibition or non-directional operation (50/51)
- for protection function 67N/67NC: inhibition or non-directional operation (50N/51N).

Setting advice

The partial loss of voltages is based on the detection of the presence of negative sequence voltage and the absence of negative sequence current.
By default:
- the presence of negative sequence voltage is detected when: Vi > 10 % Vnp (Vsi)
- the absence of negative sequence current is detected when: Ii < 5 % In (Isi)
- time delay T1 is 1 s.

These default settings ensure the stability of the VT supervision function in the event of short-circuits or transient phenomena on the network.
The Isi set point may be raised for highly unbalanced networks.

Time delay T2 for the detection of the loss of all voltages must be longer than the time it takes for a short-circuit to be cleared by the protection function 50/51 or 67, to avoid the detection of a VT loss of voltage fault triggered by a 3-phase short-circuit.

The time delay for the 51V protection function must be longer than the T1 and T2 time delays used for the detection of voltage losses.

Characteristics

Validation of the detection of partial loss of phase voltages	
Setting	Yes / No
Vsi set point	
Setting	2 % to 100 % of Vnp
Accuracy	±2 % for Vi ⩾ 10 % Vnp ±5 % for Vi < 10 % Vnp
Resolution	1 %
Pick-up / drop-out ratio	(95 ±2.5) % for Vi ⩾ 10 % Vnp
Isi set point	
Setting	5 % to 100 % of In
Accuracy	±5 %
Resolution	1 %
Pick-up / drop-out ratio	(105 ±2.5) %
Time delay T1 (partial loss of phase voltages)	
Setting	0.1 s to 300 s
Accuracy	±2 % or ±25 ms
Resolution	10 ms
Validation of the detection of the loss of all phase voltages	
Setting	Yes / No
Detection of the loss of all voltages with verification of the presence of current	
Setting	Yes / No
Time delay T2 (loss of all voltages)	
Setting	0.1 s to 300 s
Accuracy	±2 % or ±25 ms
Resolution	10 ms
Voltage and power protection behavior	
Setting	No action / inhibition
Protection 67 behavior	
Setting	Non-directional / inhibition
Protection 67N/67NC behavior	
Setting	Non-directional / inhibition

CT supervision
ANSI code 60

Operation

The CT (Current Transformer) supervision function is used to supervise the complete phase current measurement chain:
- phase current sensors (1 A/5 A CTs or LPCTs)
- phase current sensor connection to Sepam
- Sepam phase current analog inputs.

The function detects the loss of a phase current, when the three phase currents are measured.
The function is inactive if only 2 phase current sensors are connected.

The "CT fault" information disappears automatically when the situation returns to normal, i.e. as soon as the three phase currents are measured and have values greater than 10 % of In.

In the event of the loss of a phase current, the following protection functions may be inhibited to avoid nuisance tripping:
- 46, 32P and 32Q/40
- 51N and 67N, if I0 is calculated by the sum of the phase currents.

Block diagram

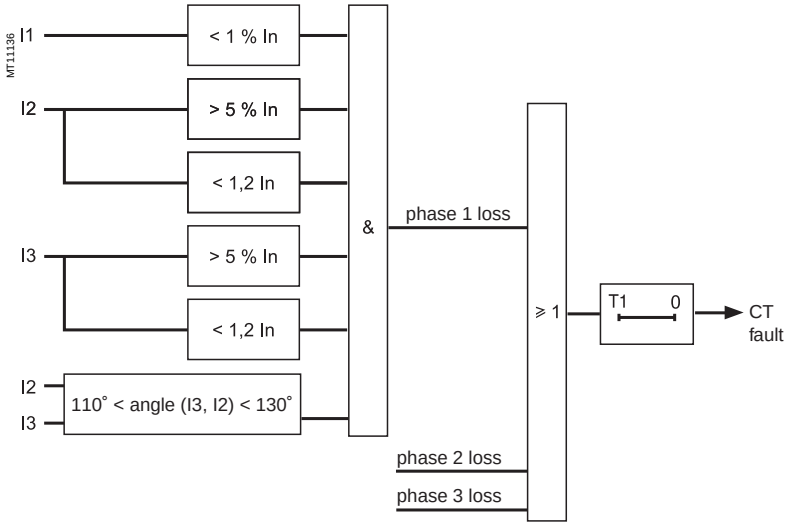

Characteristics

Time delay	
Setting	0.15 s to 300 s
Accuracy	±2 % or ±25 ms
Resolution	10 ms
Inhibition of protection functions 46, 32P, 32Q/40, 51N, 67N	
Setting	No action / inhibition

Contents

Setting ranges

Functions	Settings		Time delay
ANSI 50/51 - Phase overcurrent			
Tripping curve	Tripping time delay	Reset time	
	Definite time	DT	
	SIT, LTI, VIT, EIT, UIT (1)	DT	
	RI	DT	
	IEC: SIT/A, LTI/B, VIT/B, EIT/C	DT or IDMT	
	IEEE: MI (D), VI (E), EI (F)	DT or IDMT	
	IAC: I, VI, EI	DT or IDMT	
Is set point	0.1 to 24 In	Definite time	Inst.; 0.05 s to 300 s
	0.1 to 2.4 In	IDMT	0.1 s to 12.5 s at 10 Is
Reset time	Definite time (DT; timer hold)		Inst.; 0.05 s to 300 s
	IDMT (IDMT; reset time)		0.5 s to 20 s
Confirmation	None		
	By negative sequence overvoltage		
	By undervoltage		
ANSI 50V/51V - Voltage-restrained phase overcurrent			
Tripping curve	Tripping time delay	Reset time	
	IDMT	DT	
	SIT, LTI, VIT, EIT, UIT (1)	DT	
	RI	DT	
	IEC: SIT/A, LTI/B, VIT/B, EIT/C	DT or IDMT	
	IEEE: MI (D), VI (E), EI (F)	DT or IDMT	
	IAC: I, VI, EI	DT or IDMT	
Is set point	0.1 to 24 In	Definite time	Inst.; 0.05 s to 300 s
	0.1 to 2,4 In	IDMT	0.1 s to 12.5 s at 10 Is
Reset time	Definite time (DT; timer hold)		Inst.; 0.05 s to 300 s
	IDMT (IDMT; reset time)		0.5 s to 20 s
ANSI 50N/51N or 50G/51G - Earth fault			
Tripping curve	Tripping time delay	Reset time	
	Definite time	DT	
	SIT, LTI, VIT, EIT, UIT (1)	DT	
	RI	DT	
	IEC: SIT/A,LTI/B, VIT/B, EIT/C	DT or IDMT	
	IEEE: MI (D), VI (E), EI (F)	DT or IDMT	
	IAC: I, VI, EI	DT or IDMT	
Is0 set point	0.1 to 15 In0	Definite time	Inst.; 0.05 s to 300 s
	0.1 to 1 In0	IDMT	0.1 s to 12.5 s at 10 Is0
Reset time	Definite time (DT; timer hold)		Inst.; 0.05 s to 300 s
	IDMT (IDMT; reset time)		0.5 s to 20 s
ANSI 50 BF - Breaker failure			
Presence of current	0.2 to 2 In		
Operating time	0.05 s to 30 s		
ANSI 46 - Negative sequence / unbalance			
Definite time	0.1 to 5 Ib		0.1 s to 300 s
IDMT	0.1 to 0.5 Ib (Schneider Electric) 0.1 to 1Ib (IEC, IEEE)		0.1 s to 1 s
Tripping curve	Schneider Electric		
	IEC: SIT/A, LTI/B, VIT/B, EIT/C		
	IEEE: MI (D), VI (E), EI (F)		
ANSI 67 - Directional phase overcurrent			
Tripping curve	Tripping time delay	Reset time	
	Definite time	DT	
	SIT, LTI, VIT, EIT, UIT (1)	DT	
	RI	DT	
	CEI: SIT/A, LTI/B, VIT/B, EIT/C	DT or IDMT	
	IEEE: MI (D), VI (E), EI (F)	DT or IDMT	
	IAC: I, VI, EI	DT or IDMT	
Is set point	0.1 to 24 In	Definite time	Inst.; 0.05 s to 300 s
	0.1 to 2.4 In	IDMT	0.1 s to 12.5 s at 10 Is
Reset time	Definite time (DT; timer hold)		Inst.; 0.05 s to 300 s
	IDMT (IDMT; reset time)		0.5 s to 20 s
Characteristic angle	30°, 45°, 60°		

Note: *general settings In, Ib, In0, Unp and Vnp are described in the chapter "Metering functions" page 2/2: characteristics.*

(1) *Tripping as of 1.2 Is.*

Setting ranges

Functions	Setting		Temporisations
ANSI 67N/67NC - Directional earth fault, projection (type 1)			
Characteristic angle	-45°, 0°, 15°, 30°, 45°, 60°, 90°		
Is0 set point	0.1 to 15 In0	Definite time	Inst.; 0.05 s to 300 s
Vs0 set point	2 to 80 % of Unp		
Memory time	T0mem time	0; 0.05 s to 300 s	
	V0mem validity set point	0; 2 to 80 % of Unp	
ANSI 67N/67NC - Directional earth fault, according to vector magnitude (type 2)			
Characteristic angle	-45°, 0°, 15°, 30°, 45°, 60°, 90°		
Tripping curve	Tripping time delay	Reset time delay	
	IDMT	DT	
	SIT, LTI, VIT, EIT, UIT (1)	DT	
	RI	DT	
	IEC, SIT/A,LTI/B, VIT/B, EIT/C	DT or IDMT	
	IEEE: MI (D), VI (E), EI (F)	DT or IDMT	
	IAC: I, VI, EI	DT or IDMT	
Is0 set point	0.1 to 15 In0	Definite time	Inst.; 0.05 s to 300 s
	0.1 to 1 In0	IDMT	0.1 s to 12.5 s at 10 Is0
Vs0 set point	2 to 80 % of Unp		
Reset time	Definite time (DT; timer hold)		Inst.; 0.05 s to 300 s
	IDMT (IDMT; reset time)		0.5 s to 20 s
ANSI 32P - Directional active overpower			
	1 to 120 % of Sn (2)		0.1 s to 300 s
ANSI 32Q/40 - Directional reactive overpower			
	5 to 120 % de Sn (2)		0.1 s to 300 s
ANSI 49RMS - Thermal overload		**Rate 1**	**Rate 2**
Negative sequence factor		0 - 2.25 - 4.5 - 9	
Time constant	Heating	T1: 1 to 600 mn	T1: 1 to 600 mn
	Cooling	T2: 5 to 600 mn	T2: 5 to 600 mn
Alarm and trip set points		50 to 300 % of thermal capacity used	
Cold curve modification factor		0 to 100 %	
Switching of thermal settings condition		by logic input	
		by Is setting adjustable from 0.25 to 8 Ib	
Maximum equipment temperature		60 to 200°C	
ANSI 37 - Phase undercurrent			
	0.15 to 1 Ib		0.05 s to 300 s
ANSI 48/51LR - Excessive starting time / locked rotor			
	0.5 Ib to 5 Ib	ST start time	0.5 s to 300 s
		LT and LTS time delays	0.05 s to 300 s
ANSI 66 - Starts per hour			
Starts per period	1 to 60	Period	1 to 6 h
Consecutive starts	1 to 60	Time delay stop/start	0 to 90 mn
ANSI 38/49T - Temperature (RTDs)			
Alarm and trip set points	0 to 180 °C (or 32 to 356 °F)		
ANSI 27D - ANSI 47 - Positive sequence undervoltage			
	15 to 60 % of Unp		0.05 s to 300 s
ANSI 27R - Remanent undervoltage			
	5 to 100 % of Unp		0.05 s to 300 s
ANSI 27 - Phase-to-phase undervoltage			
	5 to 100 % of Unp		0.05 s to 300 s
ANSI 27S - Phase-to-neutral undervoltage			
	5 to 100 % of Vnp		0.05 s to 300 s
ANSI 59 - Overvoltage	**phase-to-phase**	**phase-to-neutral**	
	50 to 150 % of Unp	50 to 150 % of Vnp	0.05 s to 300 s
ANSI 59N - Neutral voltage displacement			
	2 to 80 % of Unp		0.05 s to 300 s
ANS 47 - Negative sequence overvoltage			
	1 to 50 % of Unp		Inst.; 0.05 s to 300 s
ANSI 81H - Overfrequency			
	50 to 55 Hz or 60 to 65 Hz		0.1 s to 300 s
ANSI 81L - Underfrequency			
	40 to 50 Hz or 50 to 60 Hz		0.1 s to 300 s

Note: *general settings In, Ib, In0, Unp and Vnp are described in the chapter "Metering functions" page 2/2: characteristics.*

(1) *Tripping as of 1.2 Is.*
(2) *Sn = $\sqrt{3}$.In.Unp.*

Undervoltage
ANSI code 27/27S

Operation

The protection function is three-phase and operates according to parameter setting with phase-to-neutral or phase-to-phase voltage:

- it picks up if one of the 3 phase-to-neutral or phase-to-phase voltages drops below the Us/Vs set point
- it includes a definite time delay T
- with phase-to-neutral operation, it indicates the faulty phase in the alarm associated with the fault.

Block diagram

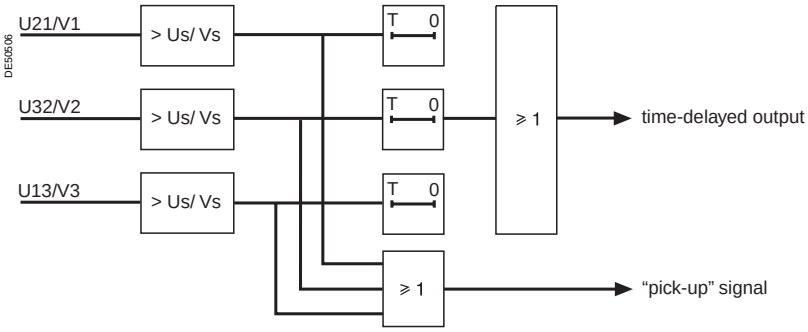

Characteristics

Us/Vs set point	
Setting	5 % Unp/Vnp to 100 % Unp/Vnp
Accuracy (1)	±2 % or ±0.005 Vnp
Resolution	1 %
Drop out/pick up ratio	103 % ±2.5 %
Time delay T	
Setting	50 ms to 300 s
Accuracy (1)	±2 %, or ±25 ms
Resolution	10 ms or 1 digit
Characteristic times	
Operation time	pick-up < 35 ms (typically 25 ms)
Overshoot time	< 35 ms
Reset time	< 40 ms

(1) *In reference conditions (IEC 60255-6).*

Connection conditions					
Type of connection	V1V2V3	U21	U21/U32	U21 + V0	U21/U32 + V0
Phase-to-neutral operation	Yes	No	No	No	Yes
Phase-to-phase operation	Yes	on U21 only	Yes	on U21 only	Yes

Positive sequence undervoltage and phase rotation direction check
ANSI code 27D/47

Operation

Positive sequence undervoltage
The protection picks up when the positive sequence component Vd of a three-phase voltage system drops below the Vsd set point with:

$$\vec{V}d = (1/3)[\vec{V}1 + a\vec{V}2 + a^2\vec{V}3]$$

$$\vec{V}d = (1/3)[\vec{U}21 - a^2\vec{U}32]$$

with $V = \frac{U}{\sqrt{3}}$ and $a = e^{j\frac{2\pi}{3}}$

- it includes a definite time delay T
- it allows drops in motor electrical torque to be detected.

Phase rotation direction
This protection also allows the phase rotation direction to be detected.
The protection considers that the phase rotation direction is inverse when the positive sequence voltage is less than 10 % of Unp and when the phase-to-phase voltage is greater than 80 % of Unp.

Block diagram

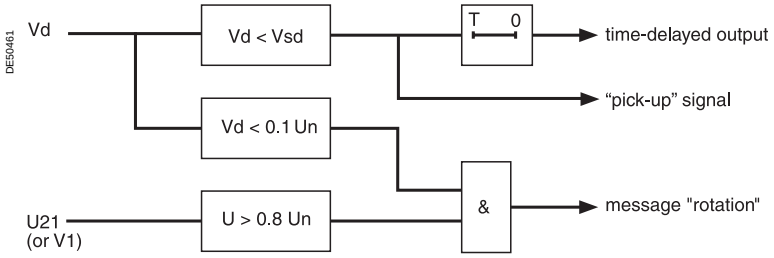

Characteristics

Vsd set point	
Setting	15 % Unp to 60 % Unp
Accuracy (1)	±2 %
Pick-up/drop-out ratio	103 % ±2.5 %
Resolution	1 %
Time delay	
Setting	50 ms to 300 s
Accuracy (1)	±2 %, or ±25 ms
Resolution	10 ms or 1 digit
Characteristic times	
Operating time	pick up < 55 ms
Overshoot time	< 35 ms
Reset time	< 35 ms

(1) *In reference conditions (IEC 60255-6).*

Remanent undervoltage
ANSI code 27R

Operation
This protection is single-phase:
- it picks up when the U21 phase-to-phase voltage is less than the Us set point
- the protection includes a definite time delay.

Block diagram

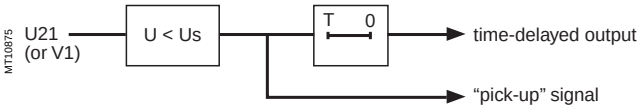

Characteristics

Us set point	
Setting	5 % Unp to 100 % Unp
Accuracy (1)	±5 % or ±0.005 Unp
Resolution	1 %
Drop out/pick up ratio	104 % ±3 %
Time delay T	
Setting	50 ms to 300 s
Accuracy (1)	±2 %, or ±25 ms
Resolution	10 ms or 1 digit
Characteristic times	
Operation time	< 40 ms
Overshoot time	< 20 ms
Reset time	< 30 ms

(1) *In reference conditions (IEC 60255-6).*

Directional active overpower
ANSI code 32P

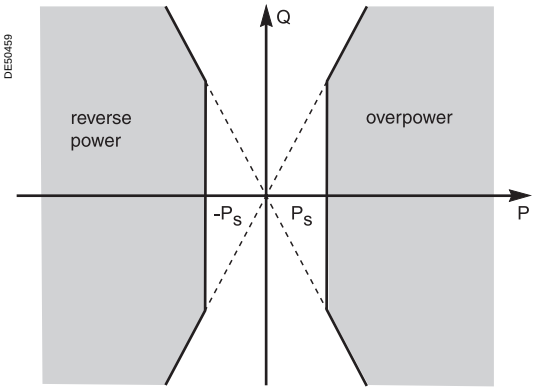

Operating zone.

Operation

This function may be used as:
- ■ "active overpower" protection for energy management (load shedding) or
- ■ "reverse active power" protection against motors running like generators and generators running like motors.

It picks up if the active power flowing in one direction or the other (supplied or absorbed) is greater than the Ps set point.
It includes a definite time delay T.
It is based on the two-wattmeter method.
The function is only enabled if the following condition is met:
P ⩾ 3.1 % Q which provides a high level of sensitivity and high stability in the event of short-circuits.

The power sign is determined according to the general feeder or incomer parameter, iaccording to the convention:
- ■ for the feeder circuit:
- □ power exported by the busbar is positive
- □ power supplied to the busbar is negative.

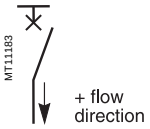

- ■ for the incomer circuit:
- □ power supplied to the busbar is positive
- □ power exported by the busbar is negative

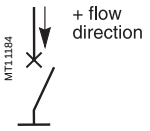

This protection function operates for V1V2V3, U21/U32 and U21/U32 + V0 connections.

Block diagram

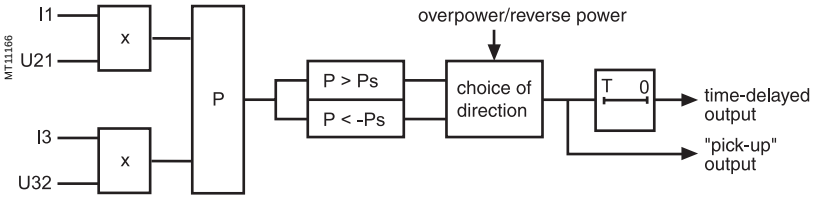

Characteristics

Tripping direction	
Setting	overpower/reverse power
Ps set point	
Setting	1 % Sn (1) to 120 % Sn (1)
Resolution	0.1 kW
Accuracy (2)	±0.3 % Sn for Ps between 1 % Sn and 5 % Sn
	±5 % for Ps between 5 % Sn and 40 % Sn
	±3 % for Ps between 40 % Sn and 120 % Sn
Drop out/pick up ratio	(93.5 ±5) %
Min. return variance	0.004 Sn
Time delay T	
Setting	100 ms to 300 s
Resolution	10 ms or 1 digit
Accuracy (2)	±2 %, or from - 10 ms to +25 ms
Characteristic times	
Operation time	< 80 ms
Overshoot time	< 90 ms
Reset time	< 80 ms

(1) *Sn = √3.Unp.In.*
(2) *In reference conditions (IEC 60255-6).*

Directional reactive overpower
ANSI code 32Q/40

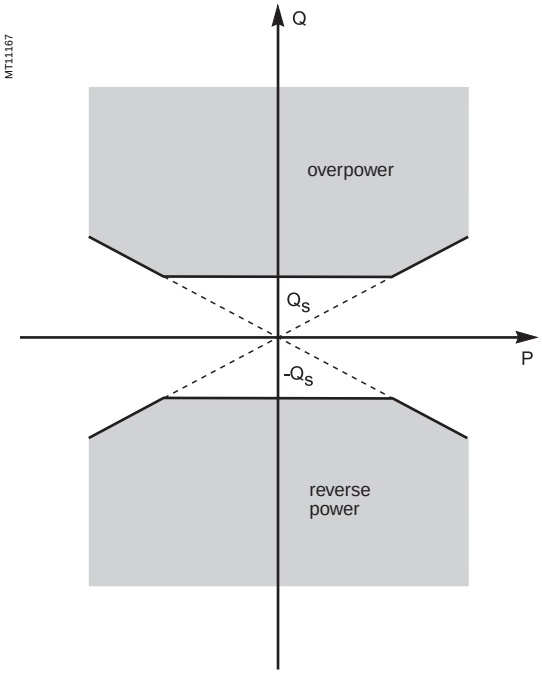

Operating zone.

Operation

This protection function is used to detect field loss on synchronous machines (generators or motors) connected to the network.
In both cases, the machine undergoes additional temperature build-up which may damage it.
It picks up if the reactive power flowing in one direction or the other (supplied or absorbed) is greater than the Qs set point.
It includes a definite time delay T.
It is based on the two-wattmeter method.
The function is only enabled if the following condition is met:
Q ⩾ 3.1 % P which provides a high level of sensitivity and high stability in the event of short-circuits.

The power sign is determined according to the general feeder or incomer parameter, iaccording to the convention:

- ■ for the feeder circuit:
  - □ power exported by the busbar is positive
  - □ power supplied to the busbar is negative

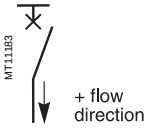

- ■ for the incomer circuit:
  - □ power supplied to the busbar is positive
  - □ power exported by the busbar is negative.

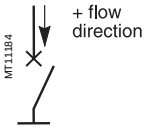

This protection function operates for V1V2V3, U21/U32 and U21/U32 + V0 connections.
To operate with certain synchronous motors, it may be necessary to inhibit the protection function during motor starting. This is done using the "Starting in progress" output of the 48/51LR function in the equation editor.

Block diagram

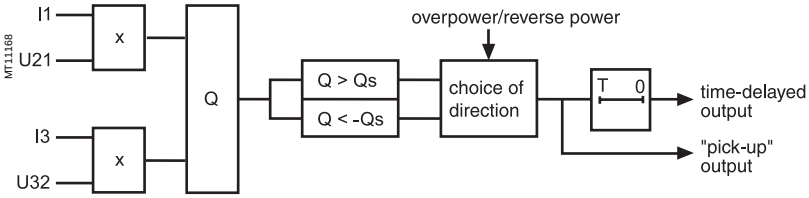

Characteristics

Tripping direction	
Setting	overpower/reverse power
Qs set point	
Setting	5 % Sn (1) to 120 % Sn (1)
Resolution	0.1 var
Accuracy (2)	±5 % for Qs between 5 % Sn and 40 % Sn
	±3 % for Qs between 40 % Sn and 120 % Sn
Drop out/pick up ratio	(93.5 ±5) %
Time delay T	
Setting	100 ms to 300 s
Resolution	10 ms or 1 digit
Accuracy (2)	±2 %, or from -10 ms to ±25 ms
Characteristic times	
Operation time	< 80 ms
Overshoot time	< 90 ms
Reset time	< 80 ms

(1) *Sn = √3.Unp.In.*
(2) *In reference conditions (IEC 60255-6).*

Phase undercurrent
ANSI code 37

Operation

This protection is single-phase:
- it picks up when phase 1 current drops below the Is set point
- it is inactive when the current is less than 10 % of Ib
- it is insensitive to current drops (breaking) due to circuit breaker tripping
- it includes a definite time delay T.

Tripping of the undercurrent protection may be inhibited by the logic input "Inhibit undercurrent".

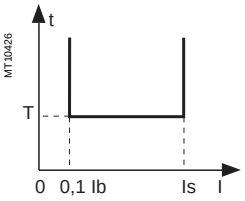

Operating principle

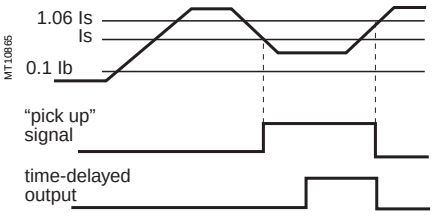

Case of current sag.

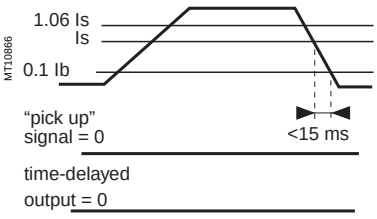

Case of circuit breaker tripping.

Block diagram

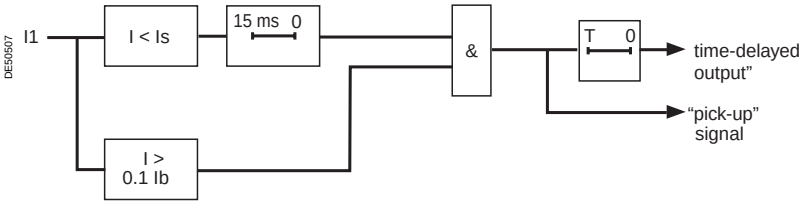

Characteristics

Is set point	
Setting	15 % Ib ⩽ Is ⩽ 100 % Ib by steps of 1 %
Accuracy (1)	±5 %
Pick-up/drop-out ratio	106 % ±5 % for Is > 0.1 In
T time delay	
Setting	50 ms ⩽ T ⩽ 300 s
Accuracy (1)	±2 % or ±25 ms
Resolution	10 ms or 1 digit
Characteristic times	
Operation time	< 60 ms
Overshoot time	< 35 ms
Reset time	< 40 ms

(1) *In reference conditions (IEC 60255-6).*

3

Negative sequence / unbalance
ANSI code 46

Operation

The negative sequence / unbalance protection function:

- picks up if the negative sequence component of phase currents is greater than the operation set point
- it is time-delayed. The time delay may be definite time or IDMT according to a standardized curve or specially adapted Schneider curve.

The negative sequence current is determined according to the 3 phase currents.

$$\vec{I}i = \frac{1}{3} \times (\vec{I}1 + a^2\,\vec{I}2 + a\,\vec{I}3)$$

with $a = e^{j\frac{2\pi}{3}}$

If Sepam is connected to 2 phase current sensors only, the negative sequence current is:

$$\left|\vec{I}i\right| = \frac{1}{\sqrt{3}} \times \left|\vec{I}1 - a^2\,\vec{I}3\right|$$

with $a = e^{j\frac{2\pi}{3}}$

Both formulas are equivalent when there is no zero sequence current (earth fault).

Definite time protection

Is is the operation set point expressed in Amps, and T is the protection operation time delay.

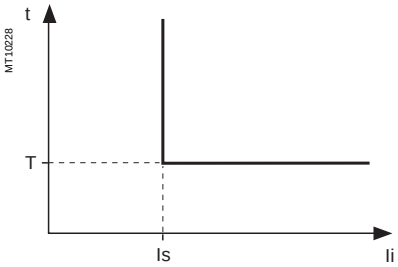

Definite time protection principle.

Standardized IDMT protection

IDMT protection operates in accordance with the IEC (60255-3), BS 142 and IEEE (C-37112) standards.

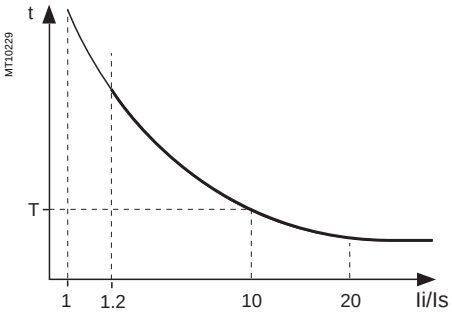

IDMT protection principle.

The Is setting is the vertical asymptote of the curve and T is the operation time delay for 10 Is.

For currents with a very large amplitude, the protection function has a definite time characteristic:

- if Ii > 20 Is, tripping time is the time that corresponds to 20 Is
- if Ii > 40 In, tripping time is the time that corresponds to 40 In.

The following standardized tripping curves are proposed:

- IEC standard inverse time SIT / A
- IEC very inverse time VIT or LTI / B
- IEC extremely inverse time EIT / C
- IEEE moderately inverse (IEC / D)
- IEEE very inverse (IEC / E)
- IEEE extremely inverse (IEC / F)

The curve equations are given in the chapter entilled "IDMT protection functions".

IDMT protection Schneider curve

For Ii > Is, the time delay depends on the value of Ii/Ib (Ib: basis current of the protected equipment defined when the general parameters are set).

T corresponds to the time delay for Ii/Ib = 5

The tripping curve is defined according to the following equations:

- for Is/Ib ⩽ Ii/Ib ⩽ 0.5

$$t = \frac{3.9}{(Ii/Ib)^{1.5}} \cdot T$$

- for 0.5 ⩽ Ii/Ib ⩽ 5

$$t = \frac{4.64}{(Ii/Ib)^{0.96}} \cdot T$$

- for Ii/Ib > 5

$t = T$

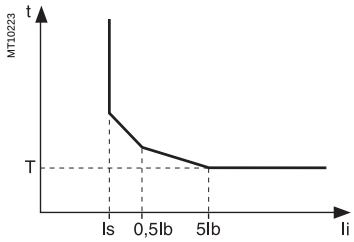

Schneider curve.

Block diagram

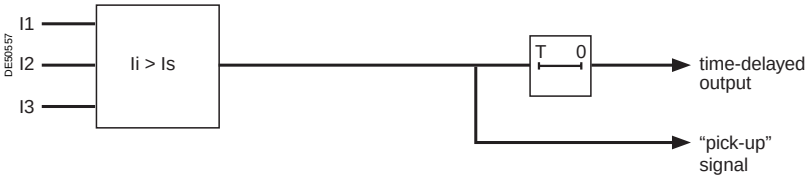

Characteristics

Curve		
Setting	Definite, standardized IDMT (a choice of 6), Schneider IDMT	
Is set point		
Setting	Definite time	10 % Ib ⩽ Is ⩽ 500 % Ib
	Standardized IDMT (IEC, IEEE)	10 % Ib ⩽ Is ⩽ 100 % Ib
	Schneider IDMT	10 % Ib ⩽ Is ⩽ 50 % Ib
Resolution		1 %
Accuracy (1)		±5 %
Time delay T		
Setting	Definite time	100 ms ⩽ T ⩽ 300 s
	IDMT	100 ms ⩽ T ⩽ 1 s
Resolution		10 ms ou 1 digit
Accuracy (1)	Definite time	±2 % or ±25 ms
	IDMT	±5 % or ±35 ms
Characteristic times		
Operation time		pick-up < 55 ms
Overshoot time		< 35 ms
Reset time		< 55 ms

(1) *In reference conditions (IEC 60255-6).*

Negative sequence / unbalance
ANSI code 46

Determination of tripping time for different negative sequence current values for a given Schneider curve

Use the table to find the value of K that corresponds to the required negative sequence current.
The tripping time is equal to KT.

Example
given a tripping curve with the setting T = 0.5 s.
What is the tripping time at 0.6 Ib?
Use the table to find the value of K that corresponds to 60 % of Ib.
The table reads K = 7.55. The tripping time is equal to:
0.5 x 7.55 = 3.755 s.

IDMT tripping Schneider curve

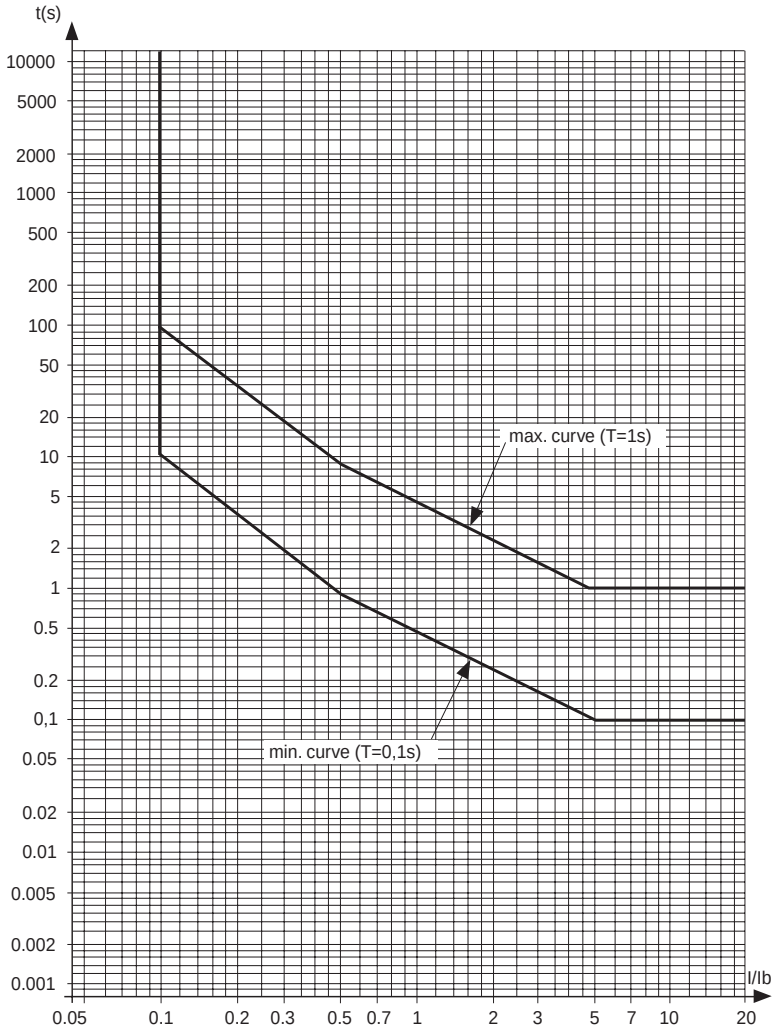

Ii (% Ib)	10	15	20	25	30	33.33	35	40	45	50	55	57.7	60	65	70	75
K	99.95	54.50	35.44	25.38	19.32	16.51	15.34	12.56	10.53	9.00	8.21	7.84	7.55	7.00	6.52	6.11

Ii (% Ib) cont'd	80	85	90	95	100	110	120	130	140	150	160	170	180	190	200	210
K cont'd	5.74	5.42	5.13	4.87	4.64	4.24	3.90	3.61	3.37	3.15	2.96	2.80	2.65	2.52	2.40	2.29

Ii (% Ib) cont'd	22.	230	240	250	260	270	280	290	300	310	320	330	340	350	360	370
K cont'd	2.14	2.10	2.01	1.94	1.86	1.80	1.74	1.68	1.627	1.577	1.53	1.485	1.444	1.404	1.367	1.332

Ii (% Ib) cont'd	380	390	400	410	420	430	440	450	460	470	480	490	⩾ 500
K cont'd	1.298	1.267	1.236	1.18	1.167	1.154	1.13	1.105	1.082	1.06	1.04	1.02	1

Negative sequence overvoltage
ANSI code 47

Operation

The protection function picks up if the negative sequence component of the voltages (Vi) is above the set point (Vsi).

- it includes a definite time delay T
- the negative sequence voltage Vi is determined from the three phase voltages:

$$\vec{V}i = \frac{1}{3}\vec{V}1 + a^2\vec{V}2 + a\vec{V}3$$

or

$$\vec{V}i = \frac{1}{3}(\vec{U}21 - a\vec{U}32)$$

with $a = e^{j\frac{2\pi}{3}}$

This protection funciton only operates with connections V1V2V3, U21/U32 + V0 and U21/U32.

Block diagram

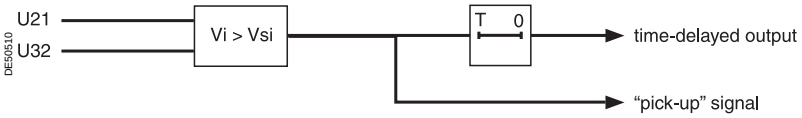

Characteristics

Vsi set point	
Setting	1 % Unp to 50 % Unp
Accuracy (1)	±2 % for Vi ⩾ 10 % Unp
	±5 % for Vi < 10 % Unp
Resolution	1 %
Drop out/pick up ratio	(97 ±2.5) % at Vi ⩾ 10 % Unp
Time delay T	
Setting	50 ms to 300 s
Accuracy (1)	±2 %, or ±25 ms
Resolution	10 ms or 1 digit
Characteristic times	
Operation time	pick-up < 55 ms
Overshoot time	< 35 ms
Reset time	< 55 ms

(1) *In reference conditions (IEC 60255-6).*

Excessive starting time, locked rotor
ANSI code 48/51LR

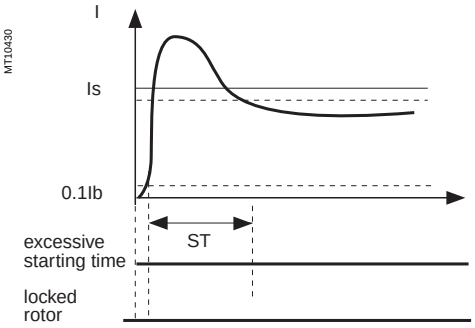

Case of normal starting.

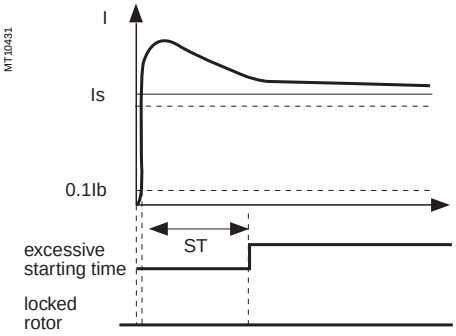

Case of excessive starting time.

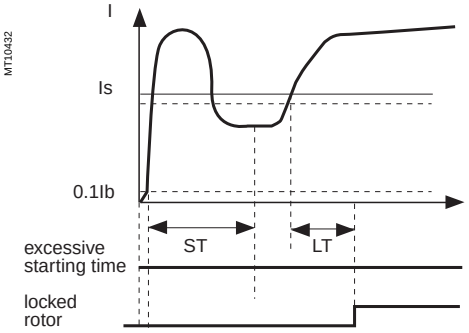

Case of locked rotor.

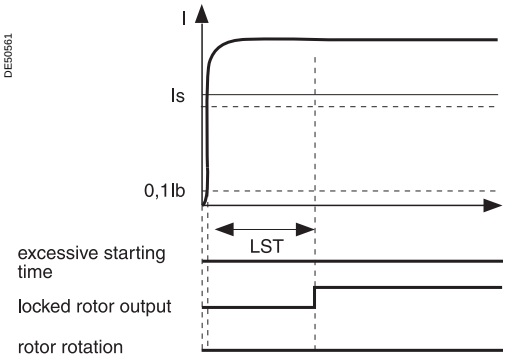

Case of starting locked rotor.

Operation

This function is three-phase.
It comprises two parts:
- excessive starting time: during starting, the protection picks up when one of the 3 phase currents is greater than the set point Is for a longer period of time than the ST time delay (normal starting time)
- locked rotor:
  - at the normal operating rate (after starting), the protection picks up when one of the 3 phase currents is greater than the set point Is for a longer period of time than the LT time delay of the definite time type.
  - locked on start: large motors may have very long starting time, due to their inertia or the reduce voltage supply. This starting time is longer than the permissive rotor blocking time. To protect such a motor LTS timer initiate a trip if a start has been detected (I > Is) or if the motor speed is zero. For a normal start, the input I23 (zero-speed-switch) disable this protection.

Motor re-acceleration
When the motor re-accelerates, it consumes a current in the vicinity of the starting current (> Is) without the current first passing through a value less than 10 % of Ib. The ST time delay, which corresponds to the normal starting time, may be reinitialized by the logic input "motor re-acceleration" which:
- reinitialize the **excessive starting time** protection,
- set the **locked rotor** protection LT time delay to a low value.

Starting is detected when the current consumed is 10 % greater than the Ib curent. An output is set when starting is in progress, to be used in the equation editor.

Block diagram

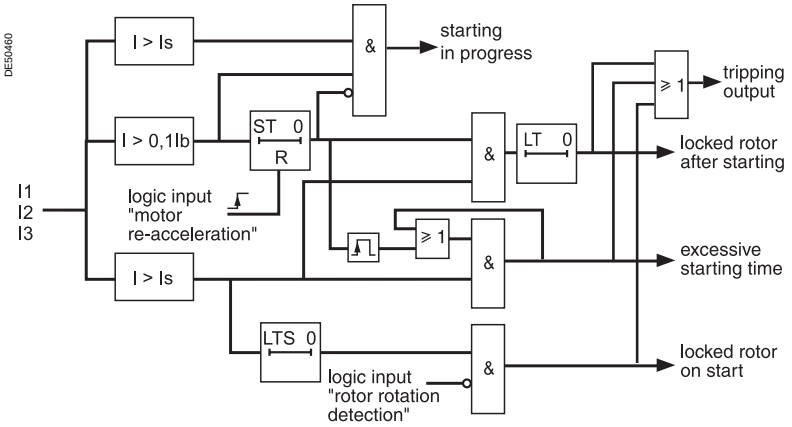

Characteristics

Is set point		
Setting		50 % Ib ⩽ Is ⩽ 500 % Ib
Resolution		1 %
Accuracy (1)		±5 %
Drop out/pick up ratio		93.5 % ±5 %
Time delay ST, LT and LTS		
Setting	ST	500 ms ⩽ T ⩽ 300 s
	LT	50 ms ⩽ T ⩽ 300 s
	LTS	50 ms ⩽ T ⩽ 300 s
Resolution		10 ms or 1 digit
Accuracy (1)		±2 % or ±25 ms

***(1)** In reference conditions (IEC 60255-6).*

Thermal overload
ANSI code 49 RMS

Description

This function is used to protect equipment (motors, transformers, generators, lines, capacitors) against overloads, based on measurement of the current consumed.

Operation curve

The protection gives a trip order when the heat rise E, calculated according to the measurement of an equivalent current Ieq, is greater than the set point Es.
The greatest permissible continuous current is
$I = Ib\sqrt{Es}$
The protection tripping time is set by the time constant T.

- the calculated heat rise depends on the current consumed and the previous heat rise state
- the cold curve defines the protection tripping time based on zero heat rise
- the hot curve defines the protection tripping time based on 100 % nominal heat rise.

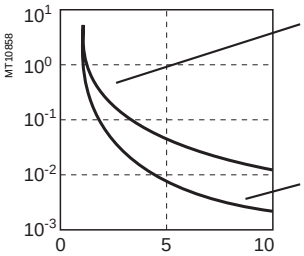

Cold curve: $\frac{t}{T} = Ln\frac{\left(\frac{Ieq}{Ib}\right)^2}{\left(\frac{Ieq}{Ib}\right)^2 - Es}$

Hot curve: $\frac{t}{T} = Ln\frac{\left(\frac{Ieq}{Ib}\right)^2 - 1}{\left(\frac{Ieq}{Ib}\right)^2 - Es}$

Alarm set point, tripping set point

Two set points may be set for heat rise:

- Es1: alarm.
- Es2: tripping.

"Hot state" set point

When the function is used to protect a motor, this fixed set point is designed for detection of the hot state used by the number of starts function.
The value of the fixed set point is 50 %.

Heat rise and cooling time constants

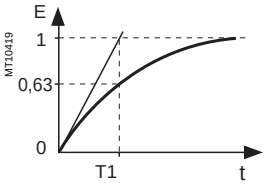

Heat rise time constant.

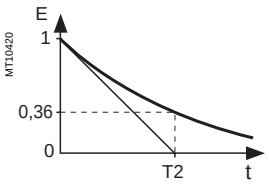

Cooling time constant.

For self-ventilated rotating machines, cooling is more effective when the machine is running than when it is stopped. Running and stopping of the equipment are calculated from the value of the current:

- running if I > 0.1 Ib
- stopped if I < 0.1 Ib.

Two time constants may be set:

- T1: heat rise time constant: concerns equipment that is running
- T2: cooling time constant: concerns equipment that is stopped.

Accounting for harmonics

The current measured by the thermal protection is an RMS 3-phase current which takes into account harmonics up to number 17.

Accounting for ambient temperature

Most machines are designed to operate at a maximum ambient temperature of 40 °C. The thermal overload function takes into account the ambient temperature (Sepam equipped with the temperature sensor option (1)) to increase the calculated heat rise value when the temperature measured exceeds 40 °C.

Increase factor: $fa = \frac{Tmax - 40°C}{Tmax - Tambient}$

in which T max is the equipment's maximum temperature (according to insulation class).
T ambient is the measured temperature.

Adaptation of the protection to motor thermal withstand

Motor thermal protection is often set based on the hot and cold curves supplied by the machine manufacturer. To fully comply with these experimental curves, additional parameters must be set:

- initial heat rise, Es0, is used to reduce the cold tripping time.

modified cold curve: $\frac{t}{T} = Ln\frac{\left(\frac{Ieq}{Ib}\right)^2 - Es0}{\left(\frac{Ieq}{Ib}\right)^2 - Es}$

- a second group of parameters (time constants and set points) is used to take into account thermal withstand with locked rotors. This second set of parameters is taken into account when the current is greater than an adjustable set point Is.

Accounting for negative sequence current

In the case of motors with coiled rotors, the presence of a negative sequence component increases the heat rise in the motor. The negative sequence component of the current is taken into account in the protection by the equation

$Ieq = \sqrt{Iph^2 + K \cdot Ii^2}$ in which Iph is the greatest phase current
Ii is the negative sequence component of the current
K is an adjustable factor

K may have the following values: 0 - 2.25 - 4.5 - 9
For an asynchronous motor, K is determined as follows:

$K = 2 \cdot \frac{Cd}{Cn} \cdot \frac{1}{g \cdot \left(\frac{Id}{Ib}\right)^2} - 1$ in which Cn, Cd: rated torque and starting torque
Ib, Id: basis current and starting current
g: rated slip.

Learning of the cooling time constant T2

The cooling time constant T2 may be learnt according to the temperatures measured in the equipment by temperature sensors connected to the MET148-2 module.
T2 is calculated every time that the equipment runs for a sufficient time, followed by a shutdown (I < 0.1Ib) and temperature stabilization.
For motors and generators, T2 is calculated according to the temperatures measured on the stator by RTDs 1, 2 and 3.
For transformers, T2 is calculated according to the temperatures measured on the primary winding by RTDs 1, 3 and 5.
For better accuracy, it is advisable to measure the ambient temperature with RTD 8.
If in the RTD assignment table, "other applications" is selected, T2 is not calculated.
Once the calculation has been made, the calculated value may be used to replace the T2 (2) parameter in two ways according to the configuration:

- automatically, in which case each new calculated value updates the T2 constant used
- or manually by entering the value in the T2 parameter.

***(1)** MET148-2 module, RTD 8 predefined for ambient temperature measurement.*

***(2)** It is advisable to use the calculated T2 if the equipment has carried out at least three starting cycles followed by cooling.*

Thermal overload
ANSI code 49 RMS

Start inhibit
The thermal overload protection can inhibit the closing of the motor's control device until the heat rise drops back down below a value that allows restarting.
This value takes into account the heat rise produced by the motor when starting.
The inhibition function is grouped together with the **starts per hour** protection and the indication START INHIBIT informs the user.

Saving of heat rise
The current heat rise is saved in the event of an auxiliary power failure.

Inhibition of tripping
Tripping of the thermal overload protection may be inhibited by the logic input "Inhibit thermal overload" when required by the process.

Use of two operating rates
The thermal overload protection function may be used to protect equipment with two operating rates, for example:
- transformers with two ventilation modes, with or without forced ventilation (ONAN / ONAF)
- two-speed motors.

The protection function comprises two groups of settings, and each group is suitable for equipment protection in one of the two operating rates.
The equipment's basis current, used to calculate heat rise, also depends on the operating rate:
- with rate 1, the basis current Ib, defined as a general Sepam parameter, is used to calculate the heat rise in the equipment
- with rate 2, the basis current Ib-rate 2, a specific thermal overload protection setting, is used to calculate the heat rise in the equipment.

Switching from one group of thermal settings to the other is done without losing the heat rise value. It is controlled:
- either via a logic input, assigned to the "switching of thermal settings" function
- or when the phase current reaches an adjustable Is set point (to be used to process the switching of thermal settings of a motor with locked rotor).

User information
The following information is available for the user:
- heat rise
- learnt cooling time constant T2
- time before restart enabled (in case of inhibition of starting)
- time before tripping (with constant current).

See chapter "Machine operation assistance functions".

Characteristics

Set point		**Rate 1**	**Rate 2**
Setting	Es1 alarm set point	50 % to 300 %	50 % to 300 %
	Es2 tripping set point	50 % to 300%	50 % to 300 %
	Es0 initial heat rise	0 to 100 %	0 to 100 %
Resolution		1 %	1 %
Time constants			
Setting	T1 running (heat rise)	1 mn to 600 mn	1 mn to 600 mn
	T2 stopped (cooling)	5 mn to 600 mn	5 mn to 600 mn
Resolution		1 mn	1 mn
Accounting for negative sequence component			
Setting	K	0 - 2,25 - 4,5 - 9	
Maximum equipment temperature (according to insulation class) (2)			
Setting	Tmax 60° to 200°		
Resolution	1°		
Tripping time			
Accuracy (1)	2 %		
Change of operating rate			
By current threshold Is	Setting	0,25 to 8 Ib	
By logic input "Switching of thermal settings"			
Basis current for thermal operating rate 2			
Setting		0,2 to 2,6 In	
Use of learnt cooling time constant (T2)			
Setting		Yes / no	

(1) *In reference conditions (IEC 60255-6).*
(2) *Equipment manufacturer data.*

Block diagram

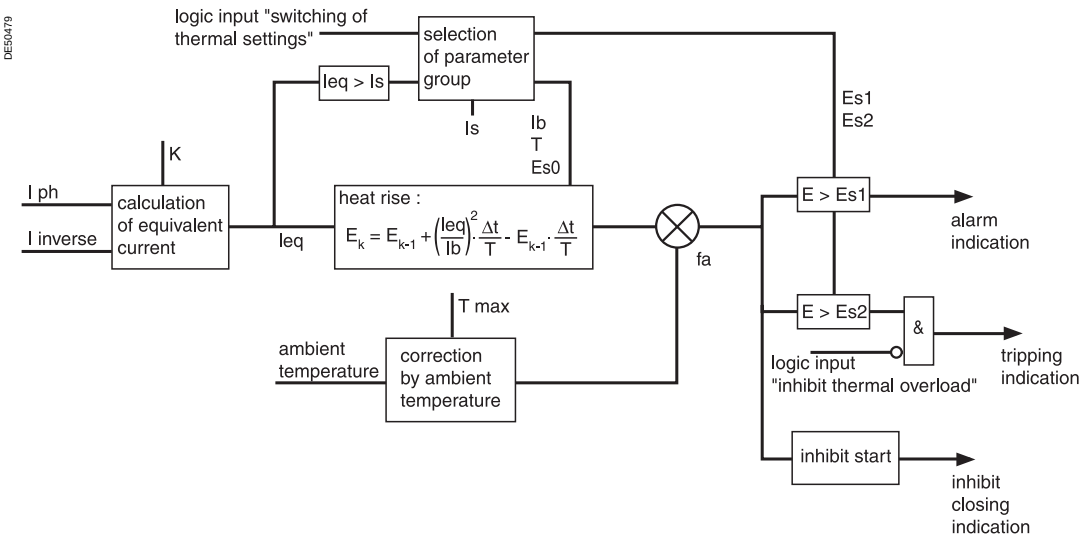

Thermal overload
ANSI code 49 RMS
Setting examples

Example 1
The following data are available:
■ time constants for on operation T1 and off operation T2:
□ T1 = 25 min
□ T2 = 70 min
■ maximum curve in steady state: Imax/Ib = 1.05.

Setting of tripping set point Es2
Es2 = $(Imax/Ib)^2$ = 110 %
Please note: if the motor absorbs a current of 1.05 Ib in steady state, the heat rise calculated by the thermal overload protection will reach 110 %.

Setting of alarm set point Es1
Es1 = 90 % (I/Ib = 0.95).
Knegative: 4.5 (usual value)
The other thermal overload parameters do not need to be set. They are not taken into account by default.

Example 2
The following data are available:
■ motor thermal resistance in the form of hot and cold curves (see solid line curves in Figure 1)
■ cooling time constant T2
■ maximum steady state current: Imax/Ib = 1.05.

Setting of tripping set point Es2
Es2 = $(Imax/Ib)^2$ = 110 %

Setting of alarm set point Es1:
Es1 = 90 % (I/Ib = 0.95).
The manufacturer's hot/cold curves (1) may be used to determine the heating time constant T1.
The method consists of placing the Sepam hot/cold curves below those of the motor.

Figure 1: motor thermal resistance and thermal overload tripping curves

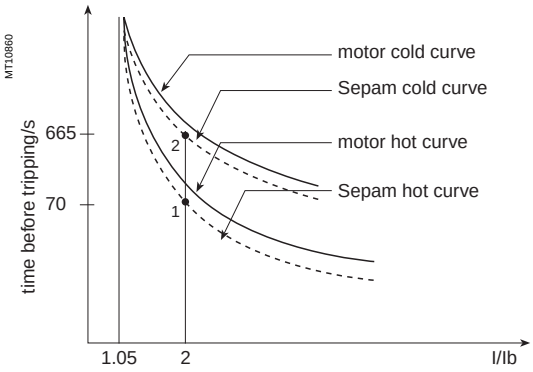

For an overload of 2*Ib, the value t/T1 = 0.0339 (2) is obtained.
In order for Sepam to trip at the point 1 (t = 70 s), T1 is equal to 2065 sec ≈ 34 min.
With a setting of T1 = 34 min, the tripping time is obtained based on a cold state (point 2). In this case, it is equal to t/T1 = 0.3216 ⇒ t ⇒ 665 sec, i.e. ≈ 11 min, which is compatible with the thermal resistance of the motor when cold.
The negative sequence factor is calculated using the equation defined on page 3/10.
The parameters of the second thermal overload relay do not need to be set.
They are not taken into account by default.

Example 3
The following data are available:
■ motor thermal resistance in the form of hot and cold curves (see solid line curves in Figure 1),
■ cooling time constant T2
■ maximum steady state current: Imax/Ib = 1.1.
The thermal overload parameters are determined in the same way as in the previous example.

Setting of tripping set point Es2
Es2 = $(Imax/Ib)^2$ = 120 %

Setting of alarm set point Es1
Es1 = 90 % (I/Ib = 0.95).
The time constant T1 is calculated so that the thermal overload protection trips after 100 s (point 1).
With t/T1 = 0.069 (I/Ib = 2 and Es2 = 120 %):
⇒ T1 = 100s / 0.069 = 1449 sec ≈ 24 min.
The tripping time starting from the cold state is equal to:
t/T1 = 0.3567 ⇒ t = 24 min*0.3567 = 513 s (point 2').
This tripping time is too long since the limit for this overload current is 400 s (point 2).
If the time constant T1 is lowered, the thermal overload protection will trip earlier, below point 2.
There risk that motor starting when hot will not be possible also exists in this case (see Figure 2 in which a lower Sepam hot curve would intersect the starting curve with U = 0.9 Un).
The **Es0 parameter** is a setting that is used to solve these differences by lowering the Sepam cold curve without moving the hot curve.
In this example, the thermal overload protection should trip after 400 s starting from the cold state.
The following equation is used to obtain the Es0 value:

$$Es0 = \left[\frac{I_{processed}}{I_b}\right]^2 - e^{\frac{t_{necessary}}{T_1}} \cdot \left[\left[\frac{I_{processed}}{I_b}\right]^2 - Es2\right]$$

with:
$t_{necessary}$: tripping time necessary starting from a cold state.
$I_{processed}$: equipment current.

(1) When the machine manufacturer provides both a time constant T1 and the machine hot/cold curves, the use of the curves is recommended since they are more accurate.
*(2) The charts containing the numerical values of the Sepam **hot curve** may be used, or else the equation of the curve which is given on page 3/10.*

In numerical values, the following is obtained:

$$Es0 = 4 - e^{\frac{400\ sec}{24 x 60 sec}} \cdot \left[4 - 1.2\right] = 0.3035 \approx 31\%$$

By setting Es0 = 31 %, point 2' is moved downward to obtain a shorter tripping time that is compatible with the motor's thermal resistance when cold (see Figure 3). Please note: A setting Es0 = 100 % therefore means that the hot and cold curves are the same.

Figure 2: hot/cold curves not compatible with the motor's thermal resistance

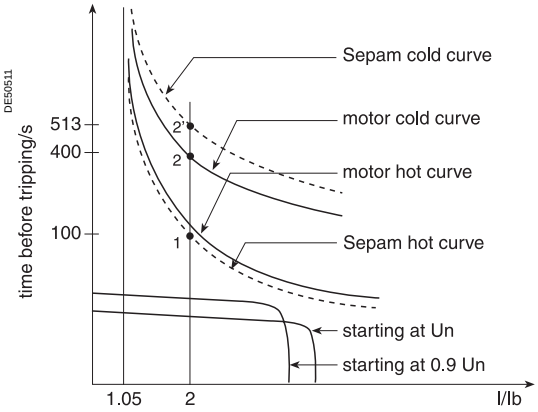

Figure 3: hot/cold curves compatible with the motor's thermal resistance via the setting of an initial heat rise Es0

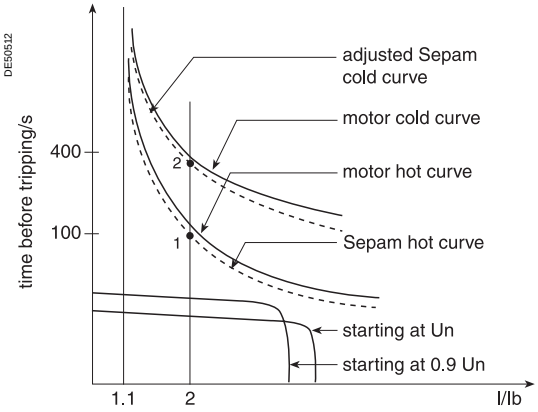

Use of the additional setting group
When a motor rotor is locked or is turning very slowly, its thermal behavior is different from that with the rated load. In such conditions, the motor is damaged by overheating of the rotor or stator. For high power motors, rotor overheating is most often a limiting factor.
The thermal overload parameters chosen for operation with a low overload are no longer valid.
In order to protect the motor in this case, "excessive starting time" protection may be used.
Nevertheless, motor manufacturers provide the thermal resistance curves when the rotor is locked, for different voltages at the time of starting.

Figure 4: Locked rotor thermal resistance

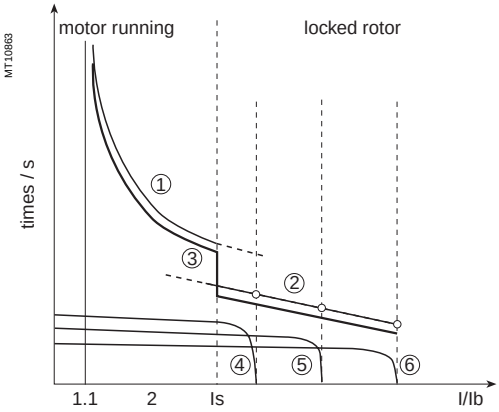

①: thermal resistance, motor running
②: thermal resistance, motor stopped
③: Sepam tripping curve
④: starting at 65 % Un
⑤: starting at 80 % Un
⑥: starting at 100 % Un

In order to take these curves into account, the second thermal overload relay may be used.
The time constant in this case is, in theory, the shortest one: however, it should not be determined in the same way as that of the first relay.
The thermal overload protection switches between the first and second relay if the equivalent current Ieq exceeds the Is value (set point current).

Example 4: transformer with 2 ventilation modes

Given the following data:
The rated current of a transformer with 2 ventilation modes is:
■ Ib = 200 A without forced ventilation (ONAN mode), the transformer's main operating rate
■ Ib = 240 A with forced ventilation (ONAF mode), a temporary operating rate, to have 20 % more power available

Setting of the basis current for ventilation operating rate 1: Ib = 200 A,
(to be set in Sepam general parameters).
Setting of the basis current for ventilation operating rate 2: Ib2 = 240 A
(to be set among the specific thermal overload protection settings).
Switching of thermal settings via logic input, to be assigned to the "switching of thermal settings" function and to be connected to the transformer ventilation control unit.
The settings related to each ventilation operating rate (Es set points, time constants, etc.) are to be determined according to the transformer characteristics provided by the manufacturer.

Thermal overload
ANSI code 49 RMS
Setting examples

Cold curves for Es0 = 0

I/Ib Es (%)	1.00	1.05	1.10	1.15	1.20	1.25	1.30	1.35	1.40	1.45	1.50	1.55	1.60	1.65	1.70	1.75	1.80
50	0.6931	0.6042	0.5331	0.4749	0.4265	0.3857	0.3508	0.3207	0.2945	0.2716	0.2513	0.2333	0.2173	0.2029	0.1900	0.1782	0.1676
55	0.7985	0.6909	0.6061	0.5376	0.4812	0.4339	0.3937	0.3592	0.3294	0.3033	0.2803	0.2600	0.2419	0.2257	0.2111	0.1980	0.1860
60	0.9163	0.7857	0.6849	0.6046	0.5390	0.4845	0.4386	0.3993	0.3655	0.3360	0.3102	0.2873	0.2671	0.2490	0.2327	0.2181	0.2048
65	1.0498	0.8905	0.7704	0.6763	0.6004	0.5379	0.4855	0.4411	0.4029	0.3698	0.3409	0.3155	0.2929	0.2728	0.2548	0.2386	0.2239
70	1.2040	1.0076	0.8640	0.7535	0.6657	0.5942	0.5348	0.4847	0.4418	0.4049	0.3727	0.3444	0.3194	0.2972	0.2774	0.2595	0.2434
75	1.3863	1.1403	0.9671	0.8373	0.7357	0.6539	0.5866	0.5302	0.4823	0.4412	0.4055	0.3742	0.3467	0.3222	0.3005	0.2809	0.2633
80	1.6094	1.2933	1.0822	0.9287	0.8109	0.7174	0.6413	0.5780	0.5245	0.4788	0.4394	0.4049	0.3747	0.3479	0.3241	0.3028	0.2836
85	1.8971	1.4739	1.2123	1.0292	0.8923	0.7853	0.6991	0.6281	0.5686	0.5180	0.4745	0.4366	0.4035	0.3743	0.3483	0.3251	0.3043
90	2.3026	1.6946	1.3618	1.1411	0.9808	0.8580	0.7605	0.6809	0.6147	0.5587	0.5108	0.4694	0.4332	0.4013	0.3731	0.3480	0.3254
95		1.9782	1.5377	1.2670	1.0780	0.9365	0.8258	0.7366	0.6630	0.6012	0.5486	0.5032	0.4638	0.4292	0.3986	0.3714	0.3470
100		2.3755	1.7513	1.4112	1.1856	1.0217	0.8958	0.7956	0.7138	0.6455	0.5878	0.5383	0.4953	0.4578	0.4247	0.3953	0.3691
105		3.0445	2.0232	1.5796	1.3063	1.1147	0.9710	0.8583	0.7673	0.6920	0.6286	0.5746	0.5279	0.4872	0.4515	0.4199	0.3917
110			2.3979	1.7824	1.4435	1.2174	1.0524	0.9252	0.8238	0.7406	0.6712	0.6122	0.5616	0.5176	0.4790	0.4450	0.4148
115			3.0040	2.0369	1.6025	1.3318	1.1409	0.9970	0.8837	0.7918	0.7156	0.6514	0.5964	0.5489	0.5074	0.4708	0.4384
120				2.3792	1.7918	1.4610	1.2381	1.0742	0.9474	0.8457	0.7621	0.6921	0.6325	0.5812	0.5365	0.4973	0.4626
125				2.9037	2.0254	1.6094	1.3457	1.1580	1.0154	0.9027	0.8109	0.7346	0.6700	0.6146	0.5666	0.5245	0.4874
130					2.3308	1.7838	1.4663	1.2493	1.0885	0.9632	0.8622	0.7789	0.7089	0.6491	0.5975	0.5525	0.5129
135					2.7726	1.9951	1.6035	1.3499	1.1672	1.0275	0.9163	0.8253	0.7494	0.6849	0.6295	0.5813	0.5390
140						2.2634	1.7626	1.4618	1.2528	1.0962	0.9734	0.8740	0.7916	0.7220	0.6625	0.6109	0.5658
145						2.6311	1.9518	1.5877	1.3463	1.1701	1.0341	0.9252	0.8356	0.7606	0.6966	0.6414	0.5934
150						3.2189	2.1855	1.7319	1.4495	1.2498	1.0986	0.9791	0.8817	0.8007	0.7320	0.6729	0.6217
155							2.4908	1.9003	1.5645	1.3364	1.1676	1.0361	0.9301	0.8424	0.7686	0.7055	0.6508
160							2.9327	2.1030	1.6946	1.4313	1.2417	1.0965	0.9808	0.8860	0.8066	0.7391	0.6809
165								2.3576	1.8441	1.5361	1.3218	1.1609	1.0343	0.9316	0.8461	0.7739	0.7118
170								2.6999	2.0200	1.6532	1.4088	1.2296	1.0908	0.9793	0.8873	0.8099	0.7438
175								3.2244	2.2336	1.7858	1.5041	1.3035	1.1507	1.0294	0.9302	0.8473	0.7768
180									2.5055	1.9388	1.6094	1.3832	1.2144	1.0822	0.9751	0.8861	0.8109
185									2.8802	2.1195	1.7272	1.4698	1.2825	1.1379	1.0220	0.9265	0.8463
190									3.4864	2.3401	1.8608	1.5647	1.3555	1.1970	1.0713	0.9687	0.8829
195										2.6237	2.0149	1.6695	1.4343	1.2597	1.1231	1.0126	0.9209
200										3.0210	2.1972	1.7866	1.5198	1.3266	1.1778	1.0586	0.9605

Thermal overload
ANSI code 49 RMS
Setting examples

Cold curves for Es0 = 0

I/Ib Es (%)	1.85	1.90	1.95	2.00	2.20	2.40	2.60	2.80	3.00	3.20	3.40	3.60	3.80	4.00	4.20	4.40	4.60
50	0.1579	0.1491	0.1410	0.1335	0.1090	0.0908	0.0768	0.0659	0.0572	0.0501	0.0442	0.0393	0.0352	0.0317	0.0288	0.0262	0.0239
55	0.1752	0.1653	0.1562	0.1479	0.1206	0.1004	0.0849	0.0727	0.0631	0.0552	0.0487	0.0434	0.0388	0.0350	0.0317	0.0288	0.0263
60	0.1927	0.1818	0.1717	0.1625	0.1324	0.1100	0.0929	0.0796	0.069	0.0604	0.0533	0.0474	0.0424	0.0382	0.0346	0.0315	0.0288
65	0.2106	0.1985	0.1875	0.1773	0.1442	0.1197	0.1011	0.0865	0.075	0.0656	0.0579	0.0515	0.0461	0.0415	0.0375	0.0342	0.0312
70	0.2288	0.2156	0.2035	0.1924	0.1562	0.1296	0.1093	0.0935	0.081	0.0708	0.0625	0.0555	0.0497	0.0447	0.0405	0.0368	0.0336
75	0.2474	0.2329	0.2197	0.2076	0.1684	0.1395	0.1176	0.1006	0.087	0.0761	0.0671	0.0596	0.0533	0.0480	0.0434	0.0395	0.0361
80	0.2662	0.2505	0.2362	0.2231	0.1807	0.1495	0.1260	0.1076	0.0931	0.0813	0.0717	0.0637	0.0570	0.0513	0.0464	0.0422	0.0385
85	0.2855	0.2685	0.2530	0.2389	0.1931	0.1597	0.1344	0.1148	0.0992	0.0867	0.0764	0.0678	0.0607	0.0546	0.0494	0.0449	0.0410
90	0.3051	0.2868	0.2701	0.2549	0.2057	0.1699	0.1429	0.1219	0.1054	0.092	0.0811	0.0720	0.0644	0.0579	0.0524	0.0476	0.0435
95	0.3251	0.3054	0.2875	0.2712	0.2185	0.1802	0.1514	0.1292	0.1116	0.0974	0.0858	0.0761	0.0681	0.0612	0.0554	0.0503	0.0459
100	0.3456	0.3244	0.3051	0.2877	0.2314	0.1907	0.1601	0.1365	0.1178	0.1028	0.0905	0.0803	0.0718	0.0645	0.0584	0.0530	0.0484
105	0.3664	0.3437	0.3231	0.3045	0.2445	0.2012	0.1688	0.1438	0.1241	0.1082	0.0952	0.0845	0.0755	0.0679	0.0614	0.0558	0.0509
110	0.3877	0.3634	0.3415	0.3216	0.2578	0.2119	0.1776	0.1512	0.1304	0.1136	0.1000	0.0887	0.0792	0.0712	0.0644	0.0585	0.0534
115	0.4095	0.3835	0.3602	0.3390	0.2713	0.2227	0.1865	0.1586	0.1367	0.1191	0.1048	0.0929	0.0830	0.0746	0.0674	0.0612	0.0559
120	0.4317	0.4041	0.3792	0.3567	0.2849	0.2336	0.1954	0.1661	0.1431	0.1246	0.1096	0.0972	0.0868	0.0780	0.0705	0.0640	0.0584
125	0.4545	0.4250	0.3986	0.3747	0.2988	0.2446	0.2045	0.1737	0.1495	0.1302	0.1144	0.1014	0.0905	0.0813	0.0735	0.0667	0.0609
130	0.4778	0.4465	0.4184	0.3930	0.3128	0.2558	0.2136	0.1813	0.156	0.1358	0.1193	0.1057	0.0943	0.0847	0.0766	0.0695	0.0634
135	0.5016	0.4683	0.4386	0.4117	0.3270	0.2671	0.2228	0.1890	0.1625	0.1414	0.1242	0.1100	0.0982	0.0881	0.0796	0.0723	0.0659
140	0.5260	0.4907	0.4591	0.4308	0.3414	0.2785	0.2321	0.1967	0.1691	0.147	0.1291	0.1143	0.1020	0.0916	0.0827	0.0751	0.0685
145	0.5511	0.5136	0.4802	0.4502	0.3561	0.2900	0.2414	0.2045	0.1757	0.1527	0.1340	0.1187	0.1058	0.0950	0.0858	0.0778	0.0710
150	0.5767	0.5370	0.5017	0.4700	0.3709	0.3017	0.2509	0.2124	0.1823	0.1584	0.1390	0.1230	0.1097	0.0984	0.0889	0.0806	0.0735
155	0.6031	0.5610	0.5236	0.4902	0.3860	0.3135	0.2604	0.2203	0.189	0.1641	0.1440	0.1274	0.1136	0.1019	0.0920	0.0834	0.0761
160	0.6302	0.5856	0.5461	0.5108	0.4013	0.3254	0.2701	0.2283	0.1957	0.1699	0.1490	0.1318	0.1174	0.1054	0.0951	0.0863	0.0786
165	0.6580	0.6108	0.5690	0.5319	0.4169	0.3375	0.2798	0.2363	0.2025	0.1757	0.1540	0.1362	0.1213	0.1088	0.0982	0.0891	0.0812
170	0.6866	0.6366	0.5925	0.5534	0.4327	0.3498	0.2897	0.2444	0.2094	0.1815	0.1591	0.1406	0.1253	0.1123	0.1013	0.0919	0.0838
175	0.7161	0.6631	0.6166	0.5754	0.4487	0.3621	0.2996	0.2526	0.2162	0.1874	0.1641	0.1451	0.1292	0.1158	0.1045	0.0947	0.0863
180	0.7464	0.6904	0.6413	0.5978	0.4651	0.3747	0.3096	0.2608	0.2231	0.1933	0.1693	0.1495	0.1331	0.1193	0.1076	0.0976	0.0889
185	0.7777	0.7184	0.6665	0.6208	0.4816	0.3874	0.3197	0.2691	0.2301	0.1993	0.1744	0.1540	0.1371	0.1229	0.1108	0.1004	0.0915
190	0.8100	0.7472	0.6925	0.6444	0.4985	0.4003	0.3300	0.2775	0.2371	0.2052	0.1796	0.1585	0.1411	0.1264	0.1140	0.1033	0.0941
195	0.8434	0.7769	0.7191	0.6685	0.5157	0.4133	0.3403	0.2860	0.2442	0.2113	0.1847	0.1631	0.1451	0.1300	0.1171	0.1062	0.0967
200	0.8780	0.8075	0.7465	0.6931	0.5331	0.4265	0.3508	0.2945	0.2513	0.2173	0.1900	0.1676	0.1491	0.1335	0.1203	0.1090	0.0993

Thermal overload
ANSI code 49 RMS
Setting examples

Cold curves for Es0 = 0

I/Ib Es (%)	4.80	5.00	5.50	6.00	6.50	7.00	7.50	8.00	8.50	9.00	9.50	10.00	12.50	15.00	17.50	20.00
50	0.0219	0.0202	0.0167	0.0140	0.0119	0.0103	0.0089	0.0078	0.0069	0.0062	0.0056	0.0050	0.0032	0.0022	0.0016	0.0013
55	0.0242	0.0222	0.0183	0.0154	0.0131	0.0113	0.0098	0.0086	0.0076	0.0068	0.0061	0.0055	0.0035	0.0024	0.0018	0.0014
60	0.0264	0.0243	0.0200	0.0168	0.0143	0.0123	0.0107	0.0094	0.0083	0.0074	0.0067	0.0060	0.0038	0.0027	0.0020	0.0015
65	0.0286	0.0263	0.0217	0.0182	0.0155	0.0134	0.0116	0.0102	0.0090	0.0081	0.0072	0.0065	0.0042	0.0029	0.0021	0.0016
70	0.0309	0.0284	0.0234	0.0196	0.0167	0.0144	0.0125	0.0110	0.0097	0.0087	0.0078	0.0070	0.0045	0.0031	0.0023	0.0018
75	0.0331	0.0305	0.0251	0.0211	0.0179	0.0154	0.0134	0.0118	0.0104	0.0093	0.0083	0.0075	0.0048	0.0033	0.0025	0.0019
80	0.0353	0.0325	0.0268	0.0225	0.0191	0.0165	0.0143	0.0126	0.0111	0.0099	0.0089	0.0080	0.0051	0.0036	0.0026	0.0020
85	0.0376	0.0346	0.0285	0.0239	0.0203	0.0175	0.0152	0.0134	0.0118	0.0105	0.0095	0.0085	0.0055	0.0038	0.0028	0.0021
90	0.0398	0.0367	0.0302	0.0253	0.0215	0.0185	0.0161	0.0142	0.0125	0.0112	0.0100	0.0090	0.0058	0.0040	0.0029	0.0023
95	0.0421	0.0387	0.0319	0.0267	0.0227	0.0196	0.0170	0.0150	0.0132	0.0118	0.0106	0.0095	0.0061	0.0042	0.0031	0.0024
100	0.0444	0.0408	0.0336	0.0282	0.0240	0.0206	0.0179	0.0157	0.0139	0.0124	0.0111	0.0101	0.0064	0.0045	0.0033	0.0025
105	0.0466	0.0429	0.0353	0.0296	0.0252	0.0217	0.0188	0.0165	0.0146	0.0130	0.0117	0.0106	0.0067	0.0047	0.0034	0.0026
110	0.0489	0.0450	0.0370	0.0310	0.0264	0.0227	0.0197	0.0173	0.0153	0.0137	0.0123	0.0111	0.0071	0.0049	0.0036	0.0028
115	0.0512	0.0471	0.0388	0.0325	0.0276	0.0237	0.0207	0.0181	0.0160	0.0143	0.0128	0.0116	0.0074	0.0051	0.0038	0.0029
120	0.0535	0.0492	0.0405	0.0339	0.0288	0.0248	0.0216	0.0189	0.0167	0.0149	0.0134	0.0121	0.0077	0.0053	0.0039	0.0030
125	0.0558	0.0513	0.0422	0.0353	0.0300	0.0258	0.0225	0.0197	0.0175	0.0156	0.0139	0.0126	0.0080	0.0056	0.0041	0.0031
130	0.0581	0.0534	0.0439	0.0368	0.0313	0.0269	0.0234	0.0205	0.0182	0.0162	0.0145	0.0131	0.0084	0.0058	0.0043	0.0033
135	0.0604	0.0555	0.0457	0.0382	0.0325	0.0279	0.0243	0.0213	0.0189	0.0168	0.0151	0.0136	0.0087	0.0060	0.0044	0.0034
140	0.0627	0.0576	0.0474	0.0397	0.0337	0.0290	0.0252	0.0221	0.0196	0.0174	0.0156	0.0141	0.0090	0.0062	0.0046	0.0035
145	0.0650	0.0598	0.0491	0.0411	0.0349	0.0300	0.0261	0.0229	0.0203	0.0181	0.0162	0.0146	0.0093	0.0065	0.0047	0.0036
150	0.0673	0.0619	0.0509	0.0426	0.0361	0.0311	0.0270	0.0237	0.0210	0.0187	0.0168	0.0151	0.0096	0.0067	0.0049	0.0038
155	0.0696	0.0640	0.0526	0.0440	0.0374	0.0321	0.0279	0.0245	0.0217	0.0193	0.0173	0.0156	0.0100	0.0069	0.0051	0.0039
160	0.0720	0.0661	0.0543	0.0455	0.0386	0.0332	0.0289	0.0253	0.0224	0.0200	0.0179	0.0161	0.0103	0.0071	0.0052	0.0040
165	0.0743	0.0683	0.0561	0.0469	0.0398	0.0343	0.0298	0.0261	0.0231	0.0206	0.0185	0.0166	0.0106	0.0074	0.0054	0.0041
170	0.0766	0.0704	0.0578	0.0484	0.0411	0.0353	0.0307	0.0269	0.0238	0.0212	0.0190	0.0171	0.0109	0.0076	0.0056	0.0043
175	0.0790	0.0726	0.0596	0.0498	0.0423	0.0364	0.0316	0.0277	0.0245	0.0218	0.0196	0.0177	0.0113	0.0078	0.0057	0.0044
180	0.0813	0.0747	0.0613	0.0513	0.0435	0.0374	0.0325	0.0285	0.0252	0.0225	0.0201	0.0182	0.0116	0.0080	0.0059	0.0045
185	0.0837	0.0769	0.0631	0.0528	0.0448	0.0385	0.0334	0.0293	0.0259	0.0231	0.0207	0.0187	0.0119	0.0083	0.0061	0.0046
190	0.0861	0.0790	0.0649	0.0542	0.0460	0.0395	0.0344	0.0301	0.0266	0.0237	0.0213	0.0192	0.0122	0.0085	0.0062	0.0048
195	0.0884	0.0812	0.0666	0.0557	0.0473	0.0406	0.0353	0.0309	0.0274	0.0244	0.0218	0.0197	0.0126	0.0087	0.0064	0.0049
200	0.0908	0.0834	0.0684	0.0572	0.0485	0.0417	0.0362	0.0317	0.0281	0.0250	0.0224	0.0202	0.0129	0.0089	0.0066	0.0050

Thermal overload
ANSI code 49 RMS
Setting examples

Hot curves for Es0 = 0

I/Ib Es (%)	1.00	1.05	1.10	1.15	1.20	1.25	1.30	1.35	1.40	1.45	1.50	1.55	1.60	1.65	1.70	1.75	1.80
105		0.6690	0.2719	0.1685	0.1206	0.0931	0.0752	0.0627	0.0535	0.0464	0.0408	0.0363	0.0326	0.0295	0.0268	0.0245	0.0226
110		3.7136	0.6466	0.3712	0.2578	0.1957	0.1566	0.1296	0.1100	0.0951	0.0834	0.0740	0.0662	0.0598	0.0544	0.0497	0.0457
115			1.2528	0.6257	0.4169	0.3102	0.2451	0.2013	0.1699	0.1462	0.1278	0.1131	0.1011	0.0911	0.0827	0.0755	0.0693
120			3.0445	0.9680	0.6061	0.4394	0.3423	0.2786	0.2336	0.2002	0.1744	0.1539	0.1372	0.1234	0.1118	0.1020	0.0935
125				1.4925	0.8398	0.5878	0.4499	0.3623	0.3017	0.2572	0.2231	0.1963	0.1747	0.1568	0.1419	0.1292	0.1183
130				2.6626	1.1451	0.7621	0.5705	0.4537	0.3747	0.3176	0.2744	0.2407	0.2136	0.1914	0.1728	0.1572	0.1438
135					1.5870	0.9734	0.7077	0.5543	0.4535	0.3819	0.3285	0.2871	0.2541	0.2271	0.2048	0.1860	0.1699
140					2.3979	1.2417	0.8668	0.6662	0.5390	0.4507	0.3857	0.3358	0.2963	0.2643	0.2378	0.2156	0.1967
145						1.6094	1.0561	0.7921	0.6325	0.5245	0.4463	0.3869	0.3403	0.3028	0.2719	0.2461	0.2243
150						2.1972	1.2897	0.9362	0.7357	0.6042	0.5108	0.4408	0.3864	0.3429	0.3073	0.2776	0.2526
155						3.8067	1.5950	1.1047	0.8508	0.6909	0.5798	0.4978	0.4347	0.3846	0.3439	0.3102	0.2817
160							2.0369	1.3074	0.9808	0.7857	0.6539	0.5583	0.4855	0.4282	0.3819	0.3438	0.3118
165							2.8478	1.5620	1.1304	0.8905	0.7340	0.6226	0.5390	0.4738	0.4215	0.3786	0.3427
170								1.9042	1.3063	1.0076	0.8210	0.6914	0.5955	0.5215	0.4626	0.4146	0.3747
175								2.4288	1.5198	1.1403	0.9163	0.7652	0.6554	0.5717	0.5055	0.4520	0.4077
180								3.5988	1.7918	1.2933	1.0217	0.8449	0.7191	0.6244	0.5504	0.4908	0.4418
185									2.1665	1.4739	1.1394	0.9316	0.7872	0.6802	0.5974	0.5312	0.4772
190									2.7726	1.6946	1.2730	1.0264	0.8602	0.7392	0.6466	0.5733	0.5138
195									4.5643	1.9782	1.4271	1.1312	0.9390	0.8019	0.6985	0.6173	0.5518
200										2.3755	1.6094	1.2483	1.0245	0.8688	0.7531	0.6633	0.5914

I/Ib Es (%)	1.85	1.90	1.95	2.00	2.20	2.40	2.60	2.80	3.00	3.20	3.40	3.60	3.80	4.00	4.20	4.40	4.60
105	0.0209	0.0193	0.0180	0.0168	0.0131	0.0106	0.0087	0.0073	0.0063	0.0054	0.0047	0.0042	0.0037	0.0033	0.0030	0.0027	0.0025
110	0.0422	0.0391	0.0363	0.0339	0.0264	0.0212	0.0175	0.0147	0.0126	0.0109	0.0095	0.0084	0.0075	0.0067	0.0060	0.0055	0.0050
115	0.0639	0.0592	0.0550	0.0513	0.0398	0.0320	0.0264	0.0222	0.0189	0.0164	0.0143	0.0126	0.0112	0.0101	0.0091	0.0082	0.0075
120	0.0862	0.0797	0.0740	0.0690	0.0535	0.0429	0.0353	0.0297	0.0253	0.0219	0.0191	0.0169	0.0150	0.0134	0.0121	0.0110	0.0100
125	0.1089	0.1007	0.0934	0.0870	0.0673	0.0540	0.0444	0.0372	0.0317	0.0274	0.0240	0.0211	0.0188	0.0168	0.0151	0.0137	0.0125
130	0.1322	0.1221	0.1132	0.1054	0.0813	0.0651	0.0535	0.0449	0.0382	0.0330	0.0288	0.0254	0.0226	0.0202	0.0182	0.0165	0.0150
135	0.1560	0.1440	0.1334	0.1241	0.0956	0.0764	0.0627	0.0525	0.0447	0.0386	0.0337	0.0297	0.0264	0.0236	0.0213	0.0192	0.0175
140	0.1805	0.1664	0.1540	0.1431	0.1100	0.0878	0.0720	0.0603	0.0513	0.0443	0.0386	0.0340	0.0302	0.0270	0.0243	0.0220	0.0200
145	0.2055	0.1892	0.1750	0.1625	0.1246	0.0993	0.0813	0.0681	0.0579	0.0499	0.0435	0.0384	0.0341	0.0305	0.0274	0.0248	0.0226
150	0.2312	0.2127	0.1965	0.1823	0.1395	0.1110	0.0908	0.0759	0.0645	0.0556	0.0485	0.0427	0.0379	0.0339	0.0305	0.0276	0.0251
155	0.2575	0.2366	0.2185	0.2025	0.1546	0.1228	0.1004	0.0838	0.0712	0.0614	0.0535	0.0471	0.0418	0.0374	0.0336	0.0304	0.0277
160	0.2846	0.2612	0.2409	0.2231	0.1699	0.1347	0.1100	0.0918	0.0780	0.0671	0.0585	0.0515	0.0457	0.0408	0.0367	0.0332	0.0302
165	0.3124	0.2864	0.2639	0.2442	0.1855	0.1468	0.1197	0.0999	0.0847	0.0729	0.0635	0.0559	0.0496	0.0443	0.0398	0.0360	0.0328
170	0.3410	0.3122	0.2874	0.2657	0.2012	0.1591	0.1296	0.1080	0.0916	0.0788	0.0686	0.0603	0.0535	0.0478	0.0430	0.0389	0.0353
175	0.3705	0.3388	0.3115	0.2877	0.2173	0.1715	0.1395	0.1161	0.0984	0.0847	0.0737	0.0648	0.0574	0.0513	0.0461	0.0417	0.0379
180	0.4008	0.3660	0.3361	0.3102	0.2336	0.1840	0.1495	0.1244	0.1054	0.0906	0.0788	0.0692	0.0614	0.0548	0.0493	0.0446	0.0405
185	0.4321	0.3940	0.3614	0.3331	0.2502	0.1967	0.1597	0.1327	0.1123	0.0965	0.0839	0.0737	0.0653	0.0583	0.0524	0.0474	0.0431
190	0.4644	0.4229	0.3873	0.3567	0.2671	0.2096	0.1699	0.1411	0.1193	0.1025	0.0891	0.0782	0.0693	0.0619	0.0556	0.0503	0.0457
195	0.4978	0.4525	0.4140	0.3808	0.2842	0.2226	0.1802	0.1495	0.1264	0.1085	0.0943	0.0828	0.0733	0.0654	0.0588	0.0531	0.0483
200	0.5324	0.4831	0.4413	0.4055	0.3017	0.2358	0.1907	0.1581	0.1335	0.1145	0.0995	0.0873	0.0773	0.0690	0.0620	0.0560	0.0509

Thermal overload
ANSI code 49 RMS
Setting examples

Hot curves for Es0 = 0

I/Ib Es (%)	4.80	5.00	5.50	6.00	6.50	7.00	7.50	8.00	8.50	9.00	9.50	10.00	12.50	15.00	17.50	20.00
105	0.0023	0.0021	0.0017	0.0014	0.0012	0.0010	0.0009	0.0008	0.0007	0.0006	0.0006	0.0005	0.0003	0.0002	0.0002	0.0001
110	0.0045	0.0042	0.0034	0.0029	0.0024	0.0021	0.0018	0.0016	0.0014	0.0013	0.0011	0.0010	0.0006	0.0004	0.0003	0.0003
115	0.0068	0.0063	0.0051	0.0043	0.0036	0.0031	0.0027	0.0024	0.0021	0.0019	0.0017	0.0015	0.0010	0.0007	0.0005	0.0004
120	0.0091	0.0084	0.0069	0.0057	0.0049	0.0042	0.0036	0.0032	0.0028	0.0025	0.0022	0.0020	0.0013	0.0009	0.0007	0.0005
125	0.0114	0.0105	0.0086	0.0072	0.0061	0.0052	0.0045	0.0040	0.0035	0.0031	0.0028	0.0025	0.0016	0.0011	0.0008	0.0006
130	0.0137	0.0126	0.0103	0.0086	0.0073	0.0063	0.0054	0.0048	0.0042	0.0038	0.0034	0.0030	0.0019	0.0013	0.0010	0.0008
135	0.0160	0.0147	0.0120	0.0101	0.0085	0.0073	0.0064	0.0056	0.0049	0.0044	0.0039	0.0035	0.0023	0.0016	0.0011	0.0009
140	0.0183	0.0168	0.0138	0.0115	0.0097	0.0084	0.0073	0.0064	0.0056	0.0050	0.0045	0.0040	0.0026	0.0018	0.0013	0.0010
145	0.0206	0.0189	0.0155	0.0129	0.0110	0.0094	0.0082	0.0072	0.0063	0.0056	0.0051	0.0046	0.0029	0.0020	0.0015	0.0011
150	0.0229	0.0211	0.0172	0.0144	0.0122	0.0105	0.0091	0.0080	0.0070	0.0063	0.0056	0.0051	0.0032	0.0022	0.0016	0.0013
155	0.0253	0.0232	0.0190	0.0158	0.0134	0.0115	0.0100	0.0088	0.0077	0.0069	0.0062	0.0056	0.0035	0.0025	0.0018	0.0014
160	0.0276	0.0253	0.0207	0.0173	0.0147	0.0126	0.0109	0.0096	0.0085	0.0075	0.0067	0.0061	0.0039	0.0027	0.0020	0.0015
165	0.0299	0.0275	0.0225	0.0187	0.0159	0.0136	0.0118	0.0104	0.0092	0.0082	0.0073	0.0066	0.0042	0.0029	0.0021	0.0016
170	0.0323	0.0296	0.0242	0.0202	0.0171	0.0147	0.0128	0.0112	0.0099	0.0088	0.0079	0.0071	0.0045	0.0031	0.0023	0.0018
175	0.0346	0.0317	0.0260	0.0217	0.0183	0.0157	0.0137	0.0120	0.0106	0.0094	0.0084	0.0076	0.0048	0.0034	0.0025	0.0019
180	0.0370	0.0339	0.0277	0.0231	0.0196	0.0168	0.0146	0.0128	0.0113	0.0101	0.0090	0.0081	0.0052	0.0036	0.0026	0.0020
185	0.0393	0.0361	0.0295	0.0246	0.0208	0.0179	0.0155	0.0136	0.0120	0.0107	0.0096	0.0086	0.0055	0.0038	0.0028	0.0021
190	0.0417	0.0382	0.0313	0.0261	0.0221	0.0189	0.0164	0.0144	0.0127	0.0113	0.0101	0.0091	0.0058	0.0040	0.0030	0.0023
195	0.0441	0.0404	0.0330	0.0275	0.0233	0.0200	0.0173	0.0152	0.0134	0.0119	0.0107	0.0096	0.0061	0.0043	0.0031	0.0024
200	0.0464	0.0426	0.0348	0.0290	0.0245	0.0211	0.0183	0.0160	0.0141	0.0126	0.0113	0.0102	0.0065	0.0045	0.0033	0.0025

Temperature monitoring
ANSI code 49T/38

Operation

This protection is associated with an RTD of the Pt100 platinum (100 Ω at 0 °C) or (nickel 100 Ω, nickel 120 Ω) type in accordance with the IEC 60751 and DIN 43760 standards.

■ it picks up when the monitored temperature is greater than the Ts set point
■ it has two independent set points:
□ alarm set point
□ tripping set point
■ when the protection is activated, it detects whether the RTD is shorted or disconnected:
□ RTD shorting is detected if the measured temperature is less than -35 °C (measurement displayed “****”)
□ RTD disconnection is detected if the measured temperature is greater than +205 °C (measurement displayed “-****”).

If an RTD fault is detected, the set point output relays are inhibited: the protection outputs are set to zero.
The "RTD fault" item is also made available in the control matrix and an alarm message is generated specifying the faulty RTD module.

Block diagram

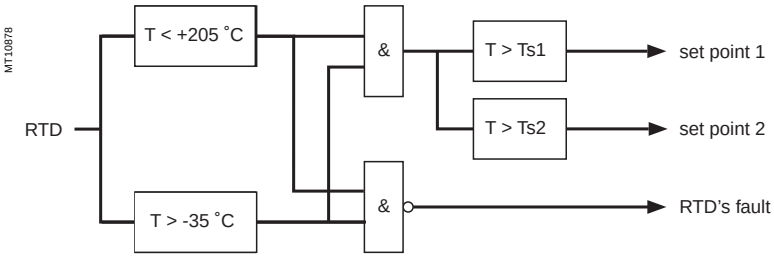

Characteristics

Ts1 and Ts2 set points	°C	°F
Setting	0 °C to 180 °C	32 °F to 356 °F
Accuracy (1)	±1,5 °C	±2.7 °F
Resolution	1 °C	1 °F
Pick-up/drop-out difference	3 °C ±0,5 °	
Characteristic times		
Tripping time	< 5 seconds	

***(1)** See **"connection of MET148-2 module"** chapter for accuracy derating according to wiring cross-section.*

Standard RTD assignments

The standard assignments described below may be selected when the first MET148-2 module is configured (SFT2841 hardware configuration screen). It is compulsory to choose an assignment in order to use the thermal overload "Cooling time constant calculation" function.

	Motor/generator choice (M41, G40)	Transformer choice (T40, T42)
RTD 1	Stator 1	Phase 1-T1
RTD 2	Stator 2	Phase 1-T2
RTD 3	Stator 3	Phase 2-T1
RTD 4	Bearing 1	Phase 2-T2
RTD 5	Bearing 2	Phase 3-T1
RTD 6	Bearing 3	Phase 3-T2
RTD 7	Bearing 4	
RTD 8	Ambient temperature	Ambient temperature

Phase overcurrent
ANSI code 50/51

Description
The phase overcurrent function comprises 2 groups of four units, called Group A and Group B respectively.
The mode of switching from one group to the other may be determined by parameter setting:
- by remote control (TC3, TC4)
- by logic input I13 (I13 = 0 group A, I13 = 1 group B)

or by forcing the use of the group.

Operation
The phase overcurrent protection function is three-pole. It picks up if one, two or three of the phase currents reach the operation set point.
The alarm connected to the operation of the protection function indicates the faulty phase or phases.
It is time-delayed. The time delay may be definite time (**DT**) or IDMT according to the curves opposite.

Confirmation
The phase overcurrent protection function includes a paramerizable confirmation component.
The output is confirmed as follows:
- by phase-to-phase undervoltage protection unit 1
- by negative sequence overvoltage protection
- no confirmation.

Definite time protection
Is is the operation set point expressed in Amps, and T is the protection operation time delay.

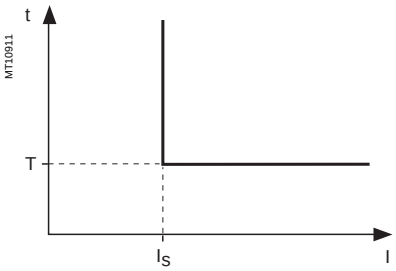

Definite time protection principle.

IDMT protection
IDMT protection operates in accordance with the IEC (60255-3), BS 142 and IEEE (C-37112) standards.

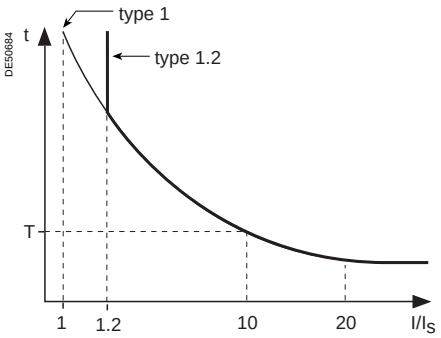

IDMT protection principle.

The Is setting is the vertical asymptote of the curve, and T is the operation time delay for 10 Is.
The tripping time for I/Is values of less than 1.2 depends on the type of curve chosen.

Name of curve	Type
Standard inverse time (SIT)	1.2
Very inverse time (VIT or LTI)	1.2
Extremely inverse time (EIT)	1.2
Ultra inverse time (UIT)	1.2
RI curve	1
IEC standard inverse time SIT / A	1
IEC very inverse time VIT or LTI / B	1
IEC extremely inverse time EIT / C	1
IEEE moderately inverse (IEC / D)	1
IEEE very inverse (IEC / E)	1
IEEE extremely inverse (IEC / F)	1
IAC inverse	1
IAC very inverse	1
IAC extremely inverse	1

The curve equations are given in the chapter entitled "IDMT protection functions".

The function takes into account current variations during the time delay interval.
For currents with a very large amplitude, the protection function has a definite time characteristic:
- if I > 20 Is, tripping time is the time that corresponds to 20 Is
- if I > 40 In, tripping time is the time that corresponds to 40 In.

(In: current transformer rated current defined when the general settings are made).

Block diagram

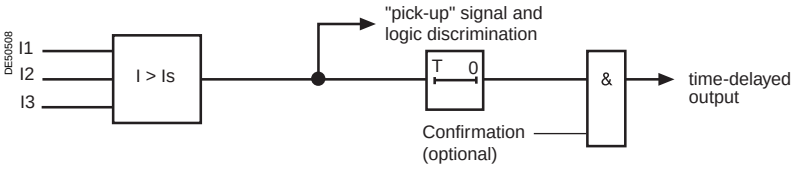

Timer hold delay
The function includes an adjustable timer hold delay T1:
- definite time (timer hold) for all the tripping curves.

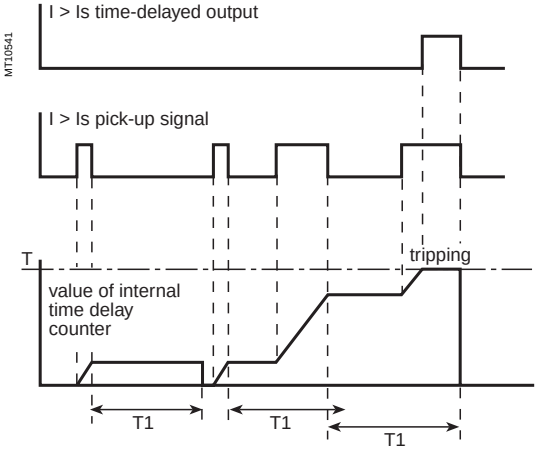

Phase overcurrent
ANSI code 50/51

■ IDMT for IEC, IEEE and IAC curves.

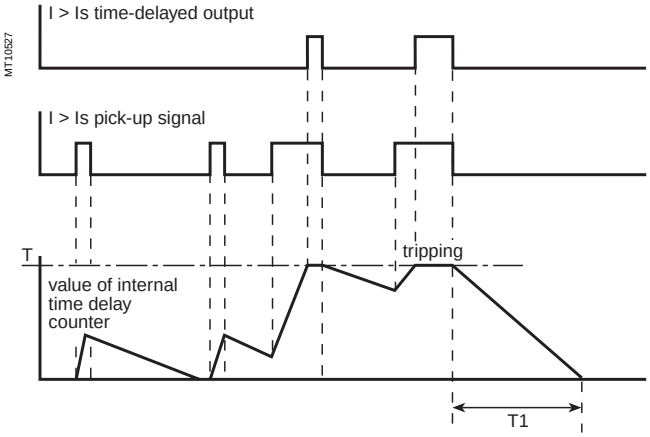

Characteristics

Tripping curve		
Setting		Definite time, IDMT: chosen according to list on page 3/24
Confirmation		
Setting		by undervoltage (unit 1) by negative sequence overvoltage none, by confirmation
Is set point		
Setting	Definite time	0.1 In ⩽ Is ⩽ 24 In expressed in Amps
	IDMT	0.1 In ⩽ Is ⩽ 2.4 In expressed in Amps
Resolution		1 A or 1 digit
Accuracy (1)		±5 %
Drop out/pick-up ratio		93.5 % ±5 % (with min. reset variance of 0.015 In)
Time delay T (operation time at 10 Is)		
Setting	Definite time	inst., 50 ms ⩽ T ⩽ 300 s
	IDMT	100 ms ⩽ T ⩽ 12.5 s or TMS (2)
Resolution		10 ms or 1 digit
Accuracy (1)	Definite time	±2 % or from -10 ms to +25 ms
	IDMT	Class 5 or from -10 ms to +25 ms
Timer hold delay T1		
Definite time (timer hold)		0; 0.05 to 300 s
IDMT (3)		0.5 to 20 s
Characteristic times		
Operation time		pick-up < 35 ms at 2 Is (typically 25 ms)
		inst. < 50 ms at 2 Is (confirmed instantaneous)
		(typically 35 ms)
Overshoot time		< 35 ms
Reset time		< 50 ms (for T1 = 0)

(1) *In reference conditions (IEC 60255-6).*

(2) *Setting ranges in TMS (Time Multiplier Setting) mode*

Inverse (SIT) and IEC SIT/A:	*0.04 to 4.20*
Very inverse (VIT) and IEC VIT/B:	*0.07 to 8.33*
Very inverse (LTI) and IEC LTI/B:	*0.01 to 0.93*
Ext inverse (EIT) and IEC EIT/C:	*0.13 to 15.47*
IEEE moderately inverse:	*0.42 to 51.86*
IEEE very inverse:	*0.73 to 90.57*
IEEE extremely inverse:	*1.24 to 154.32*
IAC inverse:	*0.34 to 42.08*
IAC very inverse:	*0.61 to 75.75*
IAC extremely inverse:	*1.08 to 134.4*

(3) *Only for standardized tripping curves of the IEC, IEEE and IAC types.*

Breaker failure
ANSI code 50BF

Operation

This function is designed to detect the failure of breakers that do not open when a tripping order is sent.

The "breaker failure" protection function is activated by an O1 output tripping order received from the overcurrent protection functions (50/51, 50N/51N, 46, 67N, 67). It checks for the disappearance of current during the time interval specified by the time delay T. It may also take into account the position of the circuit breaker read on the logic inputs to determine the actual opening of the breaker.

Automatic activation of this protection function requires the use of the program logic circuit breaker control function. A specific input may also be used to activate the protection from the equation editor. That option is useful for adding special cases of activation (e.g. tripping by an external protection unit).

The time-delayed output of the protection unit should be assigned to a logic output via the control matrix.

The starting and stopping of the time delay T counter are conditioned by the presence of a current above the set point (I > Is).

Block diagram

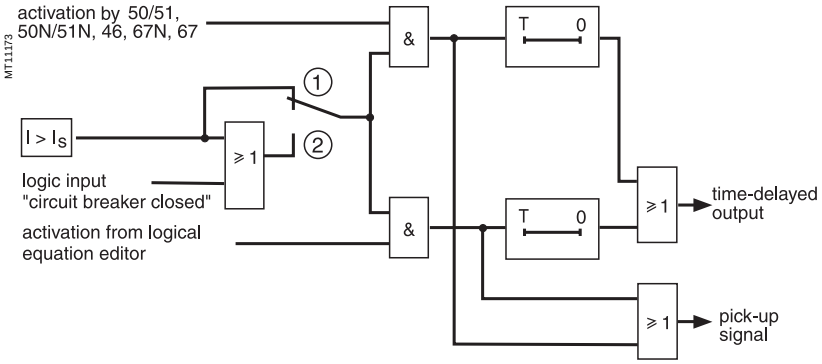

Setting: (1) without taking into account circuit breaker position
(2) with taking into account circuit breaker position

Breaker failure
ANSI code 50BF

Example of setting

Below is a case that may be used to determine the time-delay setting of the breaker failure function:
Overcurrent protection setting: T = inst.
Circuit breaker operating time: 60 ms.
Auxiliary relay operating time to open the upstream breaker or breakers: 10 ms.

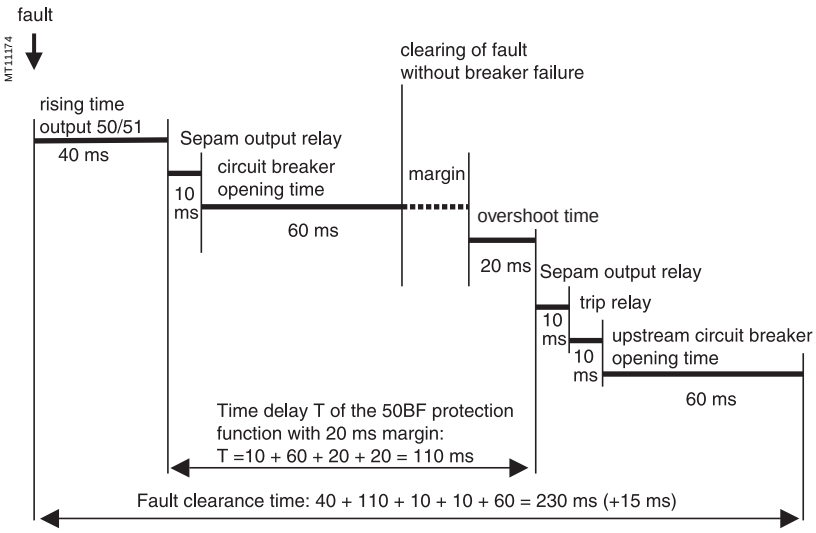

The breaker failure function time delay is the sum of the following times:
Sepam O1 output relay pick-up time = 10 ms
Circuit breaker opening time = 60 ms
Breaker failure function memory time = 20 ms
To avoid unwanted tripping of the upstream breakers, choose a margin of approximately 20 ms.
This gives us a time delay T = 110 ms.

Characteristic

Is set point	
Setting	0.2 In to 2 In
Accuracy	±5 %
Resolution	0.1 A
Drop out/pick-up ratio	(87.5 ±10) %
Time delay	
Setting	0,05 s to 300 s
Accuracy	±2 %, or from 0 to 15 ms
Resolution	10 ms or 1 digit
Characteristic time	
Overshoot time	< 20 ms
Taking into account of circuit breaker position	
Setting	With / without

Earth fault
ANSI code 50N/51N or 50G/51G

Description
The earth fault protection function comprises 2 groups of four units, called Group A and Group B respectively. The mode of switching from one group to the other may be determined by parameter setting:
- by remote control (TC3, TC4)
- by logic input I13 (I13 = 0 group A, I13 = 1 group B)

or by forcing the use of the group.

Operation
The earth fault protection function is single-pole.
It picks up if the earth fault current reaches the operation set point.
It is time-delayed. The time delay may be definite time (**DT**) or IDMT according to the curves opposite.
The protection function includes harmonic 2 restraint which provides greater stability when transformers are energized.
The restraint disables tripping, regardless of the fundamental current.
The restraint may be inhibited by parameter setting.

Definite time protection
Is0 is the operation set point expressed in Amps, and T is the protection operation time delay.

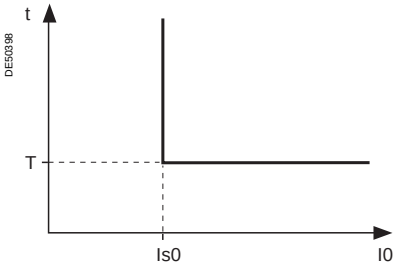

Definite time protection principle.

IDMT protection
IDMT protection operates in accordance with the IEC (60255-3), BS 142 and IEEE (C-37112) standards.

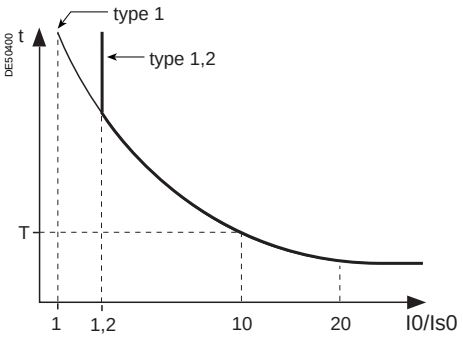

IDMT protection principle.

The Is0 setting is the vertical asymptote of the curve, and T is the operation time delay for 10 Is0.
The tripping time for I0/Is0 values of less than 1.2 depends on the type of curve chosen.

Name of curve	Type
Standard inverse time (SIT)	1.2
Very inverse time (VIT or LTI)	1.2
Extremely inverse time (EIT)	1.2
Ultra inverse time (UIT)	1.2
RI curve	1
IEC standard inverse time SIT / A	1
IEC very inverse time VIT or LTI / B	1
IEC extremely inverse time EIT / C	1
IEEE moderately inverse (IEC / D)	1
IEEE very inverse (IEC / E)	1
IEEE extremely inverse (IEC / F)	1
IAC inverse	1
IAC very inverse	1
IAC extremely inverse	1

The curve equations are given in the chapter entitled "IDMT protection functions".

The function takes into account current variations during the time delay interval.
For currents with a very large amplitude, the protection function has a definite time characteristic:
- if I > 20 Is0, tripping time is the time that corresponds to 20 Is0
- if I > 20 In0, tripping time is the time that corresponds to 20 In0 (operation based on I0 input)
- if I0 > 40 In0 (1), tripping time is the time that corresponds to 40 In0 (operation based on sum of phase currents).

Block diagram

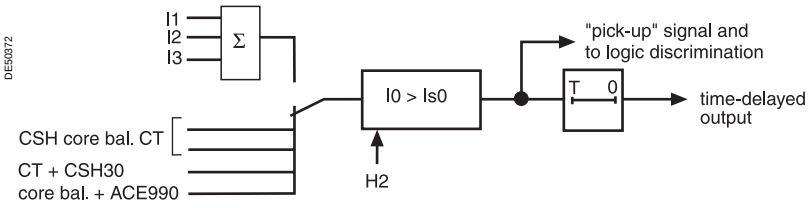

The choice between I0 (measured) and I0Σ (calculated by the sum of the phase currents) may be set for each unit, by default units 1 and 2 set to I0 and units 2 and 4 to I0Σ.
By mixing the 2 possibilities on the different units, it is possible to have:
- different dynamic set points
- different applications, e.g. zero sequence and tank earth leakage protection.

Timer hold delay
The function includes an adjustable timer hold delay T1:
- definite time (timer hold) for all the tripping curves

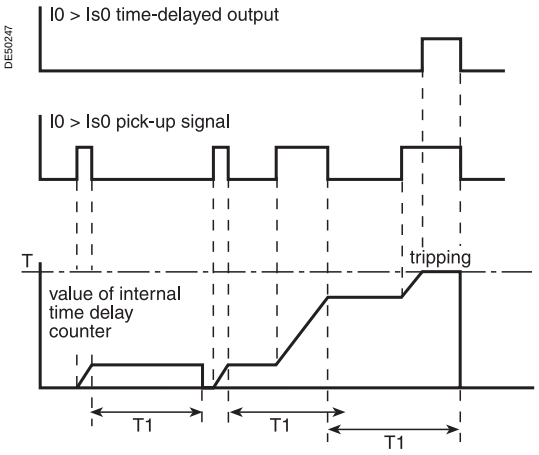

Earth fault
ANSI 50N/51N code or 50G/51G

■ IDMT for IEC, IEEE and IAC curves.

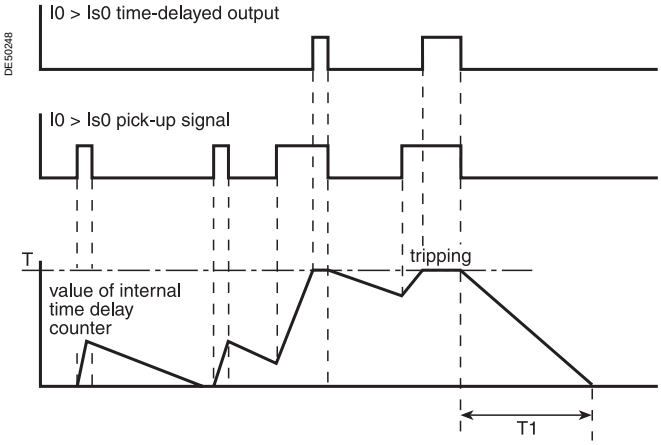

Characteristics

Tripping curve		
Setting		Definite time, IDMT: chosen according to list page 8
Is0 set point		
Definite time setting		0.1 In0 ⩽ Is0 ⩽ 15 In0 (1) expressed in Amps
	Sum of CTs	0.1 In0 ⩽ Is0 ⩽ 15 In0
	With CSH sensor	
	2 A rating	0.2 A to 30 A
	5 A rating	0.5 A to 75 A
	20 A rating	2 A to 300 A
	CT + CSH30	0.1 In0 ⩽ Is0 ⩽ 15 In0 (min. 0.1 A)
	Core balance CT with ACE990	0.1 In0 < Is0 < 15 In0
IDMT time setting		0.1 In0 ⩽ Is0 ⩽ In0 (1) expressed in Amps
	Sum of CTs	0.1 In0 ⩽ Is0 ⩽ In0
	With CSH sensor	
	2 A rating	0.2 A to 2 A
	5 A rating	0.5 A to 75 A
	20 A rating	2 A to 20 A
	CT + CSH30	0.1 In0 ⩽ Is0 ⩽ In0 (min. 0.1 A)
	Core balance CT with ACE990	0.1 In0 < Is0 < In0
Resolution		0.1 A or 1 digit
Accuracy (2)		±5 %
Drop out/pick-up ratio		93.5 % ±5 % for Is0 > 0.1 In0
Harmonic 2 restraint		
Fixed threshold		17 %
Time delay T (operation time at 10 Is0)		
Setting	Definite time	inst. 50 ms ⩽ T ⩽ 300 s
	IDMT	100 ms ⩽ T ⩽ 12.5 s or TMS (3)
Resolution		10 ms or 1 digit
Accuracy (2)	Definite time	±2 % or from -10 ms to +25 ms
	IDMT	class 5 or from -10 ms to +25 ms
Timer hold delay T1		
Definite time (timer hold)		0; 0.05 to 300 s
IDMT (4)		0.5 to 20 s
Characteristic times		
Operation time		pick-up < 35 ms at 2 Is0 (typically 25 ms)
		inst. < 50 ms at 2 Is0 (confirmed instantaneous)
		(typically 35 ms)
Overshoot time		< 35 ms
Reset time		< 40 ms (for T1 = 0)

(1) *In0 = In if the sum of the three phase currents is used for the measurement.*
In0 = sensor rating if the measurement is taken by a CSH core balance CT.
In0 = In of the CT at In/10 according to parameter setting if the measurement is taken by a 1 A or 5 A current transformer.
(2) *In reference conditions (IEC 60255-6)*
(3) *Setting ranges in TMS (Time Multiplier Setting) mode*

Inverse (SIT) and IECIEC SIT/A:	*0.04 to 4.20*
Very inverse (VIT) and IEC VIT/B:	*0.07 to 8.33*
Very inverse (LTI) and IEC LTI/B:	*0.01 to 0.93*
Ext inverse (EIT) and IEC EIT/C:	*0.13 to 15.47*
IEEE moderately inverse:	*0.42 to 51.86*
IEEE very inverse:	*0.73 to 90.57*
IEEE extremely inverse:	*1.24 to 154.32*
IAC inverse:	*0.34 to 42.08*
IAC very inverse:	*0.61 to 75.75*
IAC extremely inverse:	*1.08 to 134.4*

(4) *Only for standardized tripping curves of the IEC, IEEE and IAC types.*

Voltage-restrained phase overcurrent
ANSI code 50V/51V

Operation

The voltage-restrained phase overcurrent protection function is used to protect generators. The operation set point is adjusted according to the voltage to take into account cases of faults close to the generator which cause voltage dips and short-circuit current.
This protection function is three-pole. It picks up if one, two or three phase currents reach the voltage-adjusted operation set point Is*.
The alarm linked to operation indicates the faulty phase or phases.
It is time-delayed, and the time delay may be definite time (DT) or IDMT according to the curves opposite.
The set point is adjusted according to the lowest of the phase-to-phase voltages measured.
The adjusted set point Is* is defined by the following equation:

$$I_S^* = \frac{I_S}{3} x \left(4\frac{U}{U_N} - 0,2\right)$$

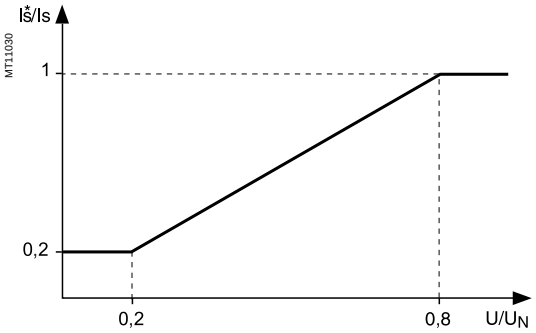

Definite time protection

Is is the operation set point expressed in Amps, and T is the protection operation time delay.

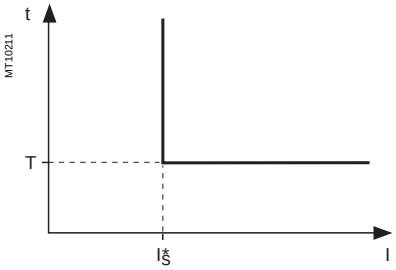

Definite time protection principle.

IDMT protection

IDMT protection operates in accordance with the IEC (60255-3), BS 142 and IEEE (C-37112) standards.

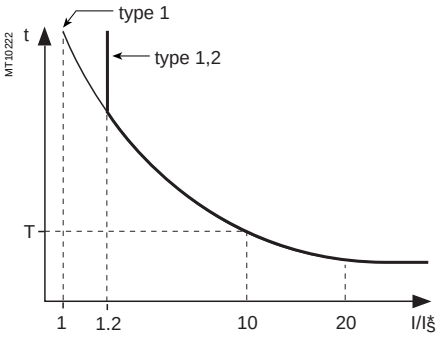

IDMT protection principle.

The Is0 setting is the vertical asymptote of the curve, and T is the operation time delay for 10 Is0.
The tripping time for I0/Is0 values of less than 1.2 depends on the type of curve chosen.

Name of curve	Type
Standard inverse time (SIT)	1.2
Very inverse time (VIT or LTI)	1.2
Extremely inverse time (EIT)	1.2
Ultra inverse time (UIT)	1.2
RI curve	1
IEC standard inverse time SIT / A	1
IEC very inverse time VIT or LTI / B	1
IEC extremely inverse time EIT / C	1
IEEE moderately inverse (IEC / D)	1
IEEE very inverse (IEC / E)	1
IEEE extremely inverse (IEC / F)	1
IAC inverse	1
IAC very inverse	1
IAC extremely inverse	1

The curve equations are given in the chapter entitled "IDMT protection functions".

The function takes into account current variations during the time delay interval.
For currents with a very large amplitude, the protection function has a definite time characteristic:
- if I > 20 Is, tripping time is the time that corresponds to 20 Is
- if I > 40 In, tripping time is the time that corresponds to 40 In

(In: current transformer rated current defined when the general settings are made).

Block diagram

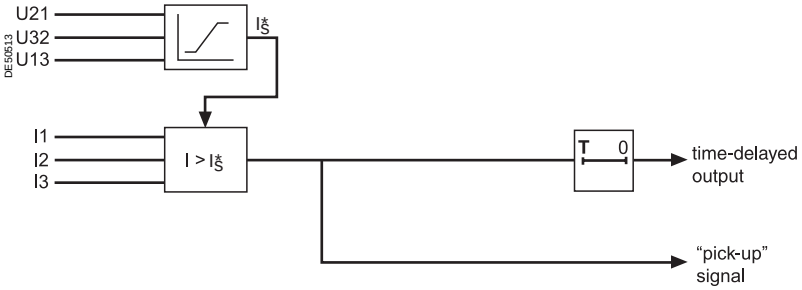

Timer hold delay

The function includes an adjustable timer hold delay T1:
- definite time (timer hold) for all the tripping curves

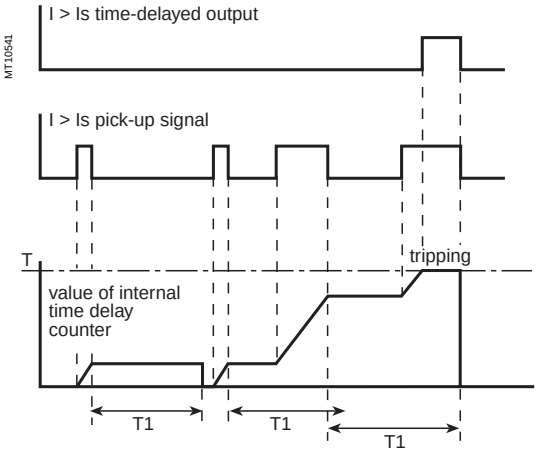

Voltage-restrained phase overcurrent
ANSI Code 50V/51V

■ IDMT for IEC, IEEE and IAC curves.

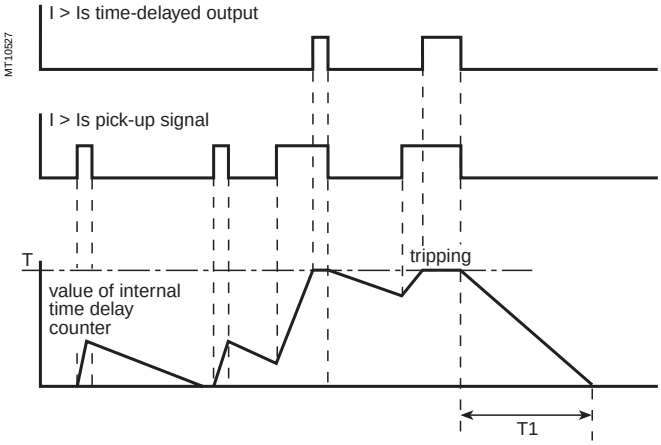

Characteristics

Tripping curve		
Setting		Definite time, IDMT: chosen according to list page 3/30
Is set point		
Setting	Definite time	0.1 In ⩽ Is ⩽ 24 In expressed in Amps
	IDMT	0.1 In ⩽ Is ⩽ 2.4 In expressed in Amps
Resolution		1 A or 1 digit
Accuracy (1)		±5 %
Drop out/pick-up ratio		93.5 % ±5 % (with min. reset variance of 0.015 In)
Time delay T (operation time at 10 Is0)		
Setting	Definite time	inst. 50 ms ⩽ T ⩽ 300
	IDMT	100 ms ⩽ T ⩽ 12.5 s or TMS (2)
Resolution		10 ms or 1 digit
Accuracy (1)	Definite time	±2 % or from -10 ms to +25 ms
	IDMT	class 5 or from -10 ms to +25 ms
Timer hold delay T1		
Definite time (timer hold)		0; 0.05 to 300 s
IDMT (3)		0.5 to 20 s
Characteristic times		
Operation time		pick-up < 35 ms at 2 Is (typically 25 ms)
		inst. < 50 ms at 2 Is (confirmed instantaneous)
		(typically 35 ms)
Overshoot time		< 35 ms
Reset time		< 50 ms (for T1 = 0)

(1) *In reference conditions (IEC 60255-6)*

(2) *Setting ranges in TMS (Time Multiplier Setting) mode*

Inverse (SIT) and IECIEC SIT/A:	*0.04 to 4.20*
Very inverse (VIT) and IEC VIT/B:	*0.07 to 8.33*
Very inverse (LTI) and IEC LTI/B:	*0.01 to 0.93*
Ext inverse (EIT) and IEC EIT/C:	*0.13 to 15.47*
IEEE moderately inverse:	*0.42 to 51.86*
IEEE very inverse:	*0.73 to 90.57*
IEEE extremely inverse :	*1,24 à 154,32*
IAC inverse:	*0.34 to 42.08*
IAC very inverse:	*0.61 to 75.75*
IAC extremely inverse:	*1.08 to 134.4*

(3) *Only for standardized tripping curves of the IEC, IEEE and IAC types.*

Overvoltage
ANSI code 59

Operation

The protection function is single-phase and operates with phase-to-neutral or phase-to-phase voltage:
- it picks up if one of the voltages concerned is above the Us/Vs set point
- it includes a definite time delay T
- with phase-to-neutral operation, it indicates the faulty phase in the alarm associated with the fault.

Block diagram

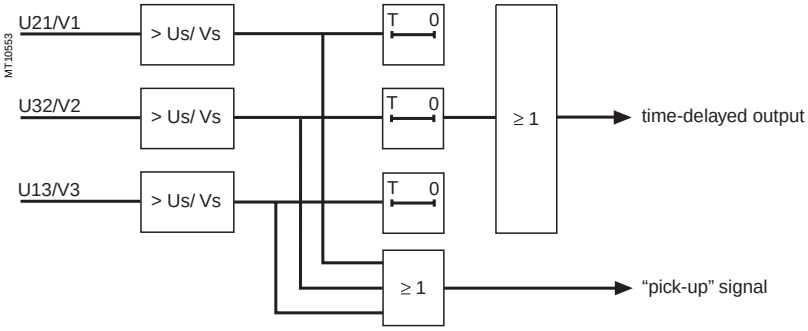

Characteristics

Us/Vs set point	
Setting	50 % Unp/Vnp to 150 % Unp/Vnp (2)
Accuracy (1)	±2 % or ±0.005 Unp
Resolution	1 %
Drop out/pick up ratio	97 % ±1 %
Time delay T	
Setting	50 ms to 300 s
Accuracy (1)	±2 %, or ±25 ms
Resolution	10 ms or 1 digit
Characteristic times	
Operation time	pick-up < 35 ms (typically 25 ms)
Overshoot time	< 35 ms
Reset time	< 40 ms

(1) *In reference conditions (IEC 60255-6).*
(2) *135 % Unp with VT 230 / √3.*

Connnection conditions					
Type of connection	V1V2V3	U21	U21/U32	U21 + V0	U21/U32 +V0
Phase-to-neutral operation	Yes	No	No	No	Yes
Phase-to-phase operation	Yes	on U21 only	Yes	on U21 only	Yes

Neutral voltage displacement
ANSI code 59N

Operation

The protection function picks up if the residual voltage V0 is above a Vs0 set point,

with $\vec{V}0 = \vec{V}1 + \vec{V}2 + \vec{V}3$,

- it includes a definite time delay T.
- the residual voltage is either calculated from the 3 phase voltages or measured by an external VT
- the protection function operates for connections: V1V2V3, U21/U32 + V0 and U21 + V0.

Block diagram

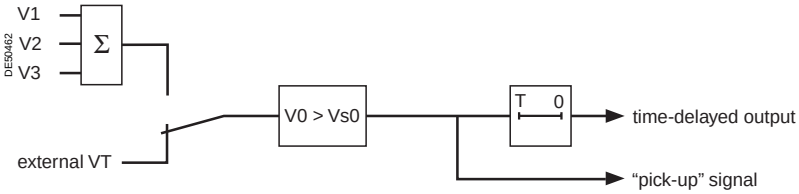

Characteristics

Vs0 set point	
Setting	2 % Unp to 80 % Unp if Vnso (2) = sum of 3Vs
	2 % Unp to 80 % Unp if Vnso (2) = Uns$\sqrt{3}$
	5 % Unp to 80 % Unp if Vnso (2) = Uns $\sqrt{3}$
Accuracy (1)	±2 % or ±0.005 Unp
Resolution	1 %
Drop out/pick up ratio	97 % ±1 %
Temporisation T	
Setting	50 ms to 300 s
Accuracy (1)	±2 %, or ±25 ms
Resolution	10 ms or 1 digit
Characteristic times	
Operation time	pick-up < 35 ms
Overshoot time	< 35 ms
Reset time	< 40 ms

(1) *In reference conditions (IEC 60255-6).*
(2) *Vnso is one of the general settings.*

Starts per hour
ANSI code 66

Operation

This function is three-phase.
It picks up when the number of starts reaches the following limits:
- maximum number of starts (Nt) allowed per period of time (P)
- maximum allowed number of consecutive hot starts (Nh)
- maximum allowed number of consecutive cold starts (Nc).

Starting is detected when the current consumed becomes greater than 10 % of the Ib current.

The number of consecutive starts is the number starts counted during the last P/Nt minutes, Nt being the number of starts allowed per period.
The motor hot state corresponds to the overshooting of the fixed set point (50 % heat rise) of the thermal overload function.
When the motor re-accelerates, it undergoes a stress similar to that of starting without the current first passing through a value less than 10 % of Ib, in which case the number of starts is not incremented.
It is possible however to increment the number of starts when a re-acceleration occurs by a logic data input (logic input "motor re-acceleration").
The "stop/start" time delay T may be used to inhibit starting after a stop until the delay has elapsed.

Use of circuit breaker closed data
In synchronous motor applications, it is advisable to connect the "circuit breaker closed" data to a logic input in order to enable more precise detection of starts. If the "circuit breaker closed" data is not connected to a logic input, the detection of a start is not conditioned by the position of the circuit breaker.

User information
The following information is available for the user:
- the waiting time before a start is allowed
- the number of starts still allowed.

See chapter "Machine operation assistance functions".

Block diagram

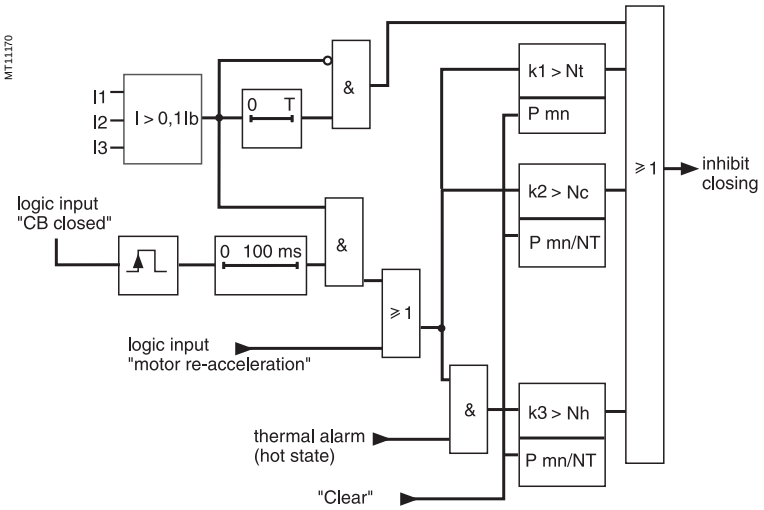

Characteristics

Period of time (P)	
Setting	1 to 6 hour
Resolution	1
Nt total number of starts	
Setting	1 to 60
Resolution	1
Nh and Nc number of consecutive starts	
Setting (1)	1 to Nt
Resolution	1
T time delay stop/start	
Setting	0 mn ≤ T ≤ 90 mn
Resolution	1 mn or 1 digit

(1) *With Nh ≤ Nc.*

Directional phase overcurrent
ANSI code 67

Description
The directional phase overcurrent function includes 2 groups of 2 units called respectively Group A and Group B.
The mode for switching from one group to the other may be determined by parameter setting:
- by remote control (TC3, TC4)
- by logic input I13 (I13 = 0 group A, I13 = 1 group B) or by forcing the use of the group.

Operation
This protection function is three-phase. It includes a phase overcurrent function associated with direction detection. It picks up if the phase overcurrent function in the chosen direction (line or busbar) is activated for at least one of the three phases (or two out of three phases, according to parameter setting). The alarm linked to the protection operation indicates the faulty phase or phases.
It is time-delayed and the time delay may be definite time (**DT**) or IDMT according to the curves page 3/37.
The direction of the current is determined according to the measurement of the phase in relation to a polarization value. It is qualified as busbar direction or line direction according to the following convention:

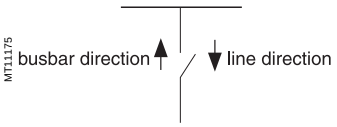

The polarization value is the phase-to-phase value in quadrature with the current for cosφ= 1 (90° connection angle).
A phase current vector plane is divided into two half-planes that correspond to the line zone and busbar zone. The characteristic angle θ is the angle of the perpendicular to the boundary line between the 2 zones and the polarization value.

Voltage memory
Should all the voltages disappear during a 3-phase fault near the busbar, the voltage level may be insufficient for the fault direction to be detected (< 1.5 % Unp). The protection function therefore uses a voltage memory to reliably determine the direction. The fault direction is saved as long as the voltage level is too low and the current is above the Is set point.

Closing due to a pre-existing fault
If the circuit breaker is closed due to a pre-existing 3-phase fault on the busbar, the voltage memory is blank. As a result, the direction cannot be determined and the protection does not trip. In such cases, a backup 50/51 protection function should be used.

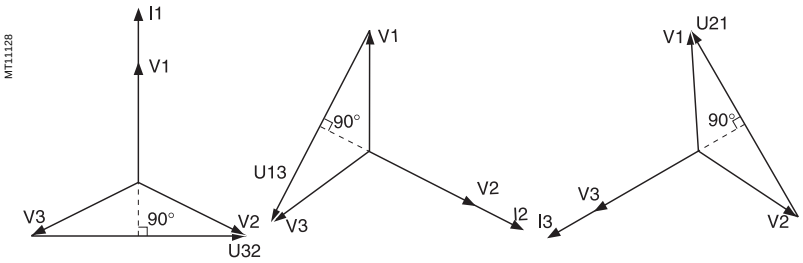

Three-phase function: polarization currents and voltages.

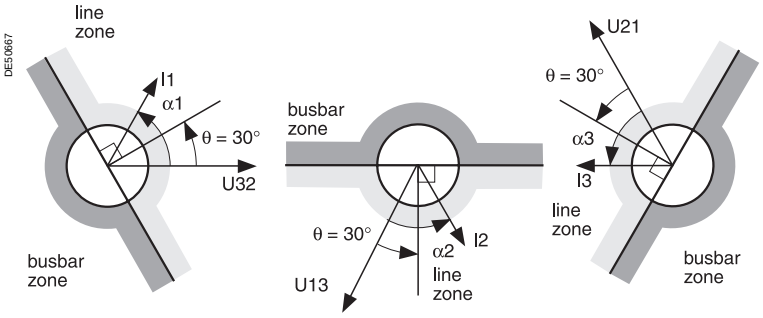

Fault tripping in line zone with θ = 30°.

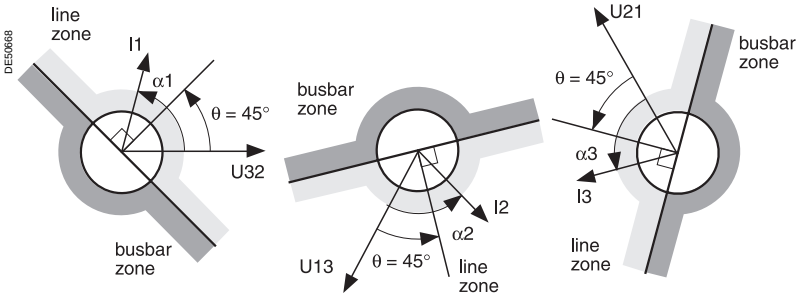

Fault tripping in line zone with θ = 45°.

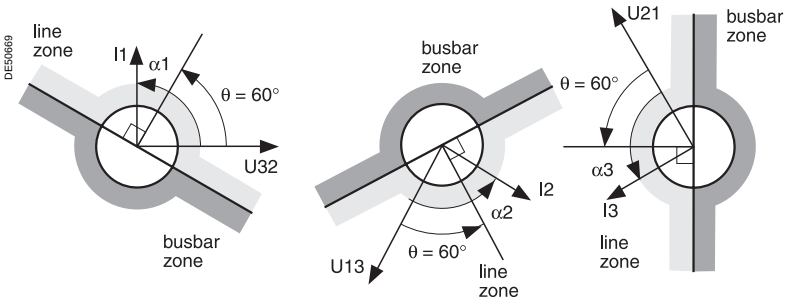

Fault tripping in line zone with θ = 60°.

Directional phase overcurrent
ANSI code 67

Block diagram

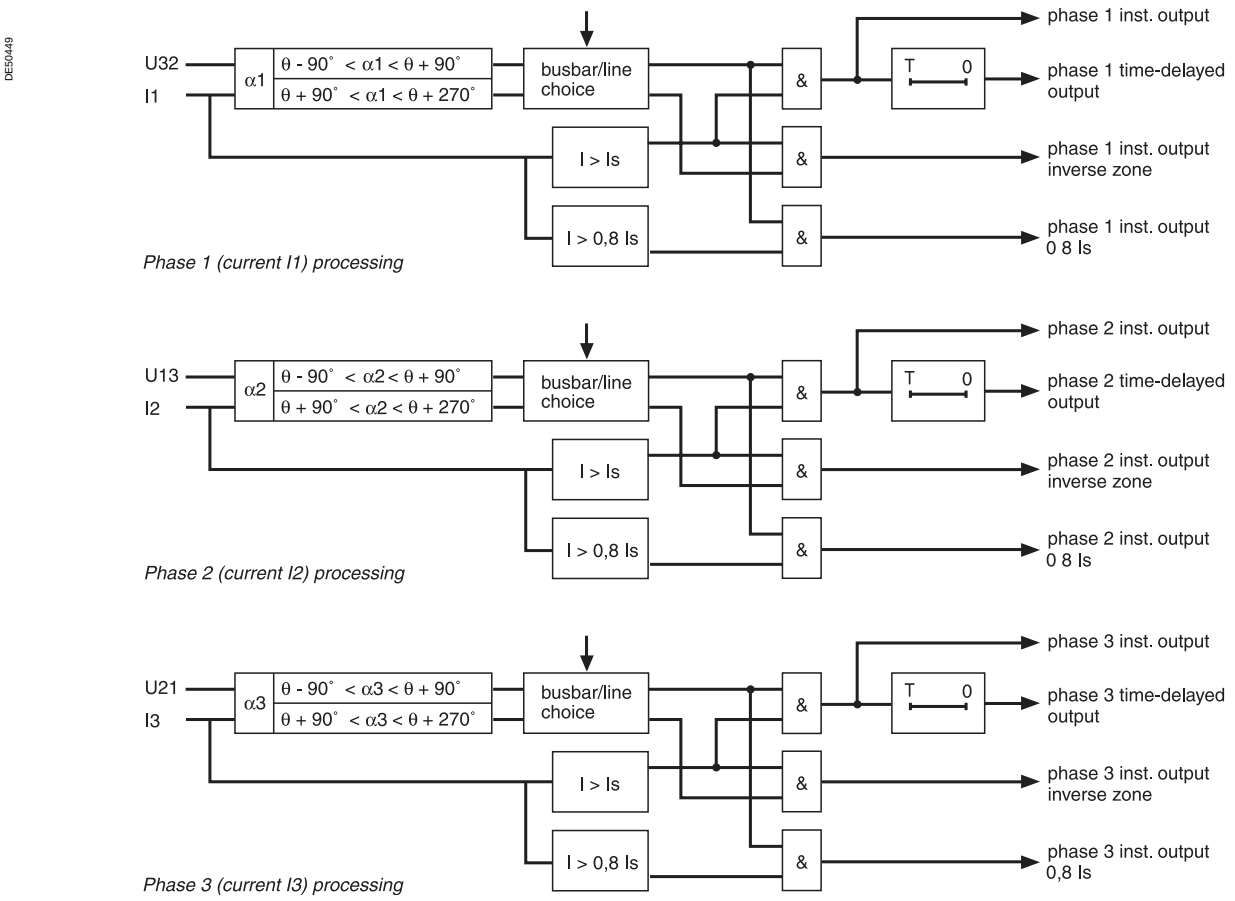

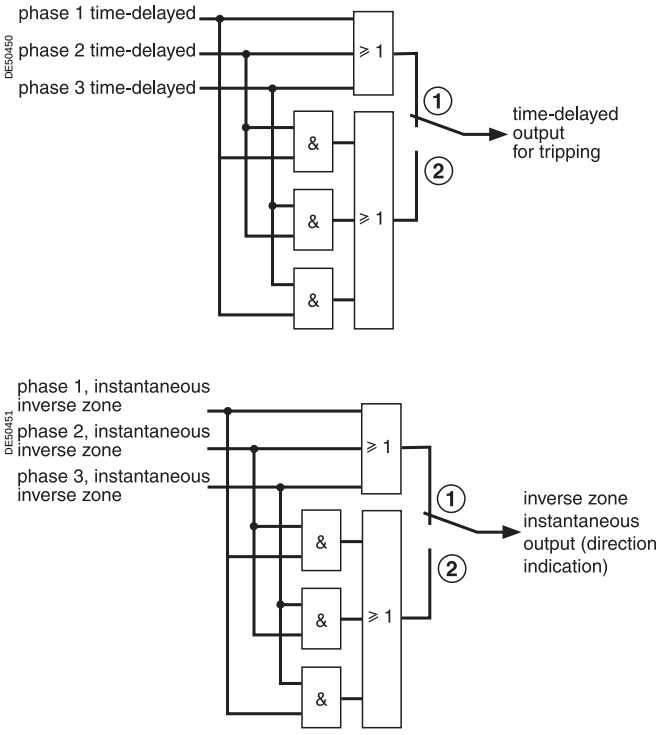

Grouping of output data

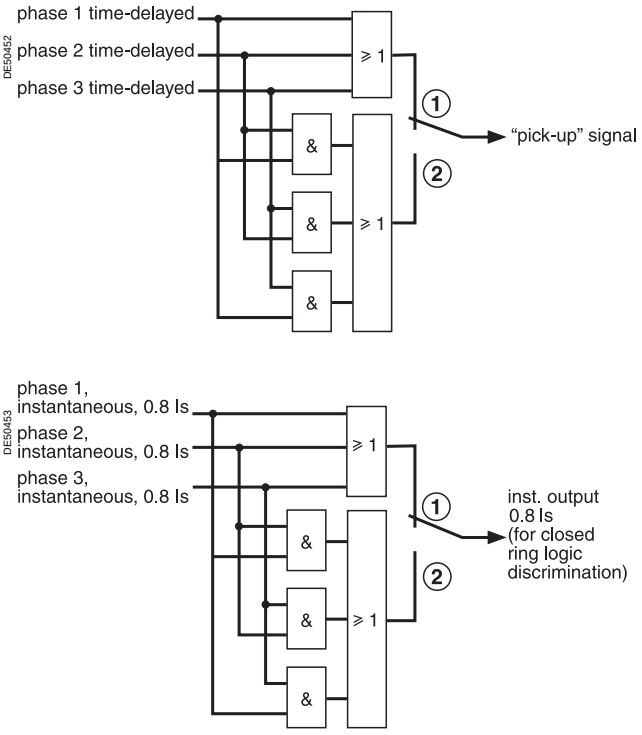

Setting of tripping logic:
MT11182
(1) *one out of three*
(2) *two out of three*
Grouping of output data

Tripping logic

In certain cases, it is wise to choose a tripping logic of the two out of three phases type. Such cases may occur when two parallel transformers (Dy) are being protected. For a 2-phase fault on a transformer primary winding, there is a 2-1-1 ratio current distribution at the secondary end. The highest current is in the expected zone (operation zone for the faulty incomer, no operation zone for the fault-free incomer).
One of the lowest currents is at the limit of the zone. According to the line parameters, it may even be in the wrong zone.
There is therefore a risk of tripping both incomers.

Time delay

Definite time protection
Is is the operation set point expressed in Amps, and T is the protection operation time delay.

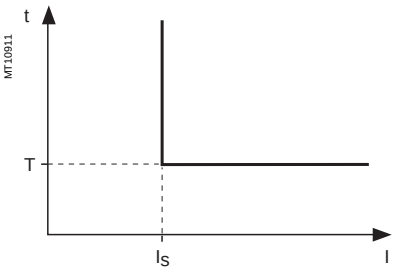

Definite time protection principle.

IDMT protection
IDMT protection operates in accordance with the IEC (60255-3), BS 142 and IEEE (C-37112) standards.

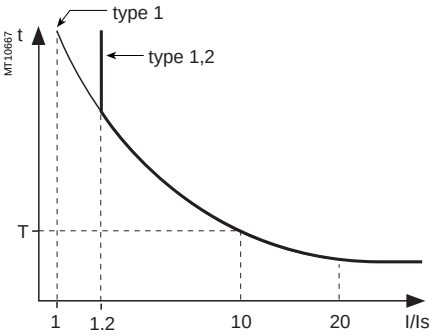

IDMT protection principle.

The Is setting is the vertical asymptote of the curve, and T is the operation time delay for 10 Is.
The tripping time for I/Is values of less than 1.2 depends on the type of curve chosen.

Name of curve	Type
Standard inverse time (SIT)	1.2
Very inverse time (VIT or LTI)	1.2
Extremely inverse time (EIT)	1.2
Ultra inverse time (UIT)	1.2
RI curve	1
IEC standard inverse time SIT / A	1
IEC very inverse time VIT or LTI / B	1
IEC extremely inverse time EIT / C	1
IEEE moderately inverse (IEC / D)	1
IEEE very inverse (IEC / E)	1
IEEE extremely inverse (IEC / F)	1
IAC inverse	1
IAC very inverse	1
IAC extremely inverse	1

The curve equations are given in the chapter entitled "IDMT protection functions".

The function takes into account current variations during the time delay interval.
For currents with a very large amplitude, the protection function has a definite time characteristic:
- if I > 20 Is, tripping time is the time that corresponds to 20 Is
- if I > 40 In, tripping time is the time that corresponds to 40 In.

(In: current transformer rated current defined when the general settings are made).

Timer hold delay

The function includes an adjustable timer hold delay T1:
- definite time (timer hold) for all the tripping curves.

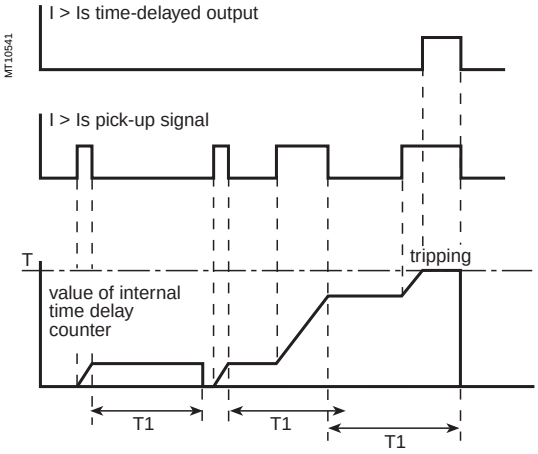

Directional phase overcurrent
ANSI code 67

■ IDMT for IEC, IEEE and IAC curves.

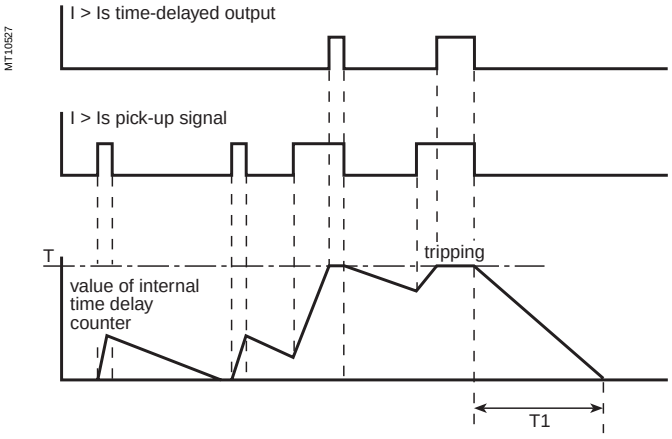

Characteristics

Characteristic angle θ		
Setting		30°, 45°, 60°
Accuracy		±2°
Tripping direction		
Setting		Busbar / line
Tripping logic		
Setting		One out of three / two out of three
Tripping curve		
Setting		Definite time
		IDMT: chosen according to list page 3/37
Is set point		
Setting	Definite time	0.1 In ⩽ Is ⩽ 24 In expressed in Amps
	IDMT	0.1 In ⩽ Is ⩽ 2.4 In expressed in Amps
Resolution		1 A or 1 digit
Accuracy (1)		±5 %
Drop out/pick-up ratio		93.5 % ±5 % (with min. reset variance of 0.015 In)
Time delay T (operation time at 10 Is)		
Setting	Definite time	inst., 50 ms ⩽ T ⩽ 300 s
	IDMT	100 ms ⩽ T ⩽ 12.5 s or TMS (2)
Resolution		10 ms or 1 digit
Accuracy (1)	Definite time	±2 % or from -10 ms to +25 ms
	IDMT	Class 5 or from -10 ms to +25 ms
Timer hold delay T1		
Definite time		
(timer hold)		0 ; 0.05 to 300 s
IDMT (3)		0.5 to 20 s
Characteristic times		
Operation time		pick-up < 75 ms to 2 Is (typically 65 ms)
		inst < 90 ms to 2 Is (confirmed instantaneous)
		(typically 75 ms)
Overshoot time		< 40 ms
Reset time		< 50 ms (for T1 = 0)

(1) *In reference conditions (IEC 60255-6).*
(2) *Setting ranges in TMS (Time Multiplier Setting) mode*

Inverse (SIT) and IEC SIT/A:	*0.04 to 4.20*
Very inverse (VIT) and IEC VIT/B:	*0.07 to 8.33*
Very inverse (LTI) and IEC LTI/B:	*0.01 to 0.93*
Ext inverse (EIT) and IEC EIT/C:	*0.13 to 15.47*
IEEE moderately inverse:	*0.42 to 51.86*
IEEE very inverse:	*0.73 to 90.57*
IEEE extremely inverse:	*1.24 to 154.32*
IAC inverse:	*0.34 to 42.08*
IAC very inverse:	*0.61 to 75.75*
IAC extremely inverse:	*1.08 to 134.4*

(3) *Only for standardized tripping curves of the IEC, IEEE and IAC types.*

Directional earth fault
ANSI code 67N/67NC

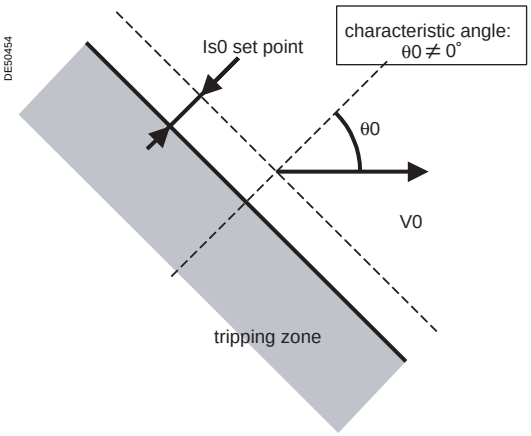

Tripping characteristic of protection function 67N type 1 (θ0 ≠ 0°).

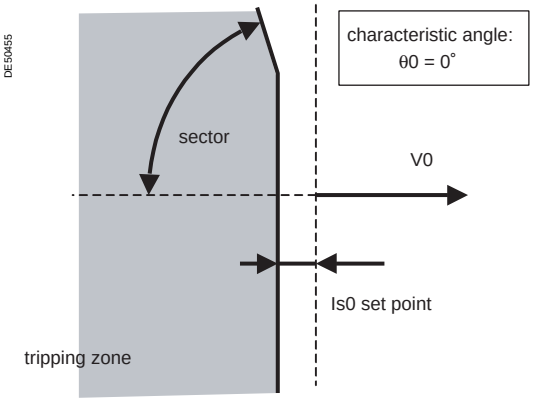

Tripping characteristic of protection function 67N type 1 (θ0 = 0°).

Description

This function comprises 2 groups of settings, with 2 units for each group.
The mode of switching groups of settings may be determined by parameter setting:
- by input I13 (I13 = 0 group A, I13 = 1 group B)
- by remote control (TC3, TC4)
- operation with a single group (group A or group B).

To adapt to all cases of applications and all earthing systems, the protection function operates according to two different types of characteristics, i.e. a choice of:
- type 1: the protection function uses I0 vector projection
- type 2: the protection function uses I0 vector magnitude.

Type 1 operation

The function determines the projection of the residual current I0 on the characteristic line, the position of which is set by the setting of characteristic angle θ0 in relation to the residual voltage. The projection value is compared to the Is0 set point.
The projection method is suitable for radial feeders in resistive, isolated or compensated neutral systems.

With compensated neutral systems, it is characterized by its capacity to detect very brief, repetitive faults (recurrent faults). In the case of Petersen coils with no additional resistance, fault detection in steady state operating conditions is not possible due to the absence of active zero sequence current. The protection function uses the transient current at the beginning of the fault to ensure tripping.

The θ0 = 0° setting is suitable for compensated neutral systems. When this setting is selected, the parameter setting of the sector is used to reduce the protection tripping zone to ensure its stability on fault-free feeders.

The protection function operates with the residual current measured at the relay I0 input (operation with sum of three currents impossible). The protection function is inhibited for residual voltages below the Vs0 set point. The time delay is definite time.

When a memory is added, recurrent faults can be detected; the memory is controlled by a time delay or by the residual voltage value.
The tripping direction can be set at the busbar end or line end.

Block diagram

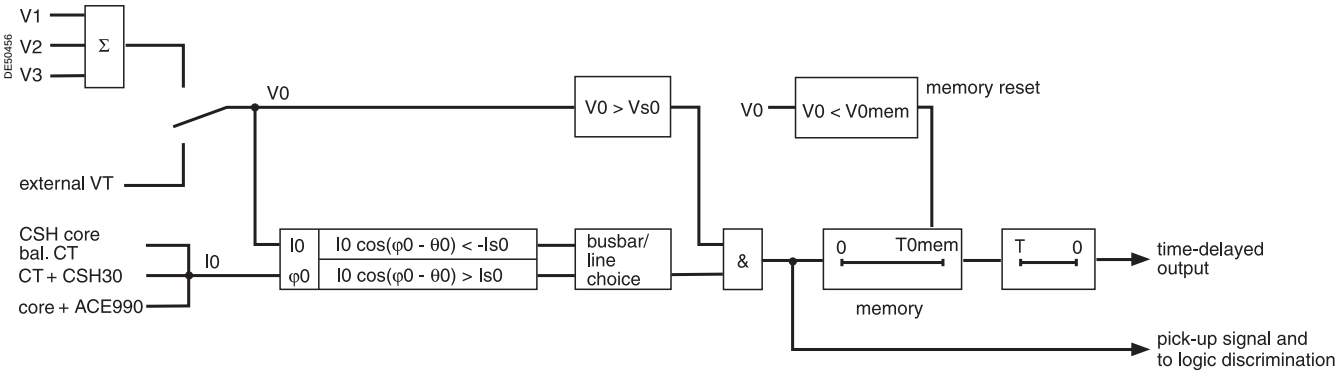

Directional earth fault
ANSI code 67N/67NC

Definite time operation

Is0 is the operation set point expressed in Amps, and T is the protection operation time delay.

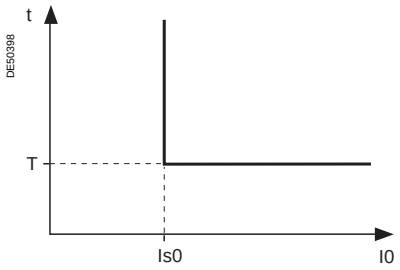

Definite time protection principle.

Memory

The detection of recurrent faults is controlled by the time delay T0mem which extends the transient pick-up information, thereby enabling the operation of the definite time delay even with faults that are rapidly extinguished (≈ 2 ms) and restrike periodically. Even when a Petersen coil with no additional resistance is used, tripping is ensured by fault detection during the transient fault appearance, with detection extended throughout the duration of the fault based on the V0 ⩾ V0mem criterion, within the limit of T0mem. With this type of application, T0mem must be greater than T (definite time delay).

Standard setting

The settings below are given for usual applications in the different earthing systems. The shaded boxes represent default settings.

	Isolated neutral	Impedant neutral	Compensated neutral
Is0 set point	To be set according to network coordination study	To be set according to network coordination study	To be set according to network coordination study
Characteristic angle θ0	90°	0°	0°
Time delay T	To be set according to network coordination study	To be set according to network coordination study	To be set according to network coordination study
Direction	Line	Line	Line
Vs0 setpoint	2 % of Uns	2 % of Uns	2 % of Uns
Sector	N/A	86°	86°
Memory time T0mem	0	0	200 ms
Memory voltage V0mem	0	0	0

Directional earth fault
ANSI code 67N/67NC

Characteristics type 1

Characteristic angle θ0		
Setting		-45°, 0°, 15°, 30°, 45°, 60°, 90°
Accuracy		±5°
Tripping direction		
Setting		Busbar / line
Is0 set point		
Setting (1)		0.1 In0 ⩽ Is0 ⩽ 15 In0 (1) expressed in Amps
	With CSH sensor	
	2 A rating	0.2 A ⩽ Is0 ⩽ 30 A
	5 A rating	0.5 A ⩽ Is0 ⩽ 75 A
	20 A rating	2 A ⩽ Is0 ⩽ 300 A
	TC + CSH30 (1)	0.1 In0 ⩽ Is0 ⩽ 15 In0 (min. 0.1 A)
	Core balance CT with ACE990	0.1 In0 ⩽ Is0 ⩽ 15 In0
Resolution		0.1 A or 1 digit
Accuracy		±5 %
Drop out/pick-up ratio		93.5 % ⩽ 5 %
Vs0 set point		
Setting		2 % Unp to 80 % Unp
Resolution		1 %
Accuracy		±5 %
Sector		
Setting		86°; 83°; 76°
Accuracy		±2°
Time delay T		
Setting		inst., 0.05 ms ⩽ T ⩽ 300 s
Resolution		10 ms or 1 digit
Accuracy		⩽ 2 % or -10 ms to +25 ms
Memory time T0mem		
Setting		0; 50 ms ⩽ T0mem ⩽ 300 s
Resolution		10 ms ou 1 digit
Memory voltage V0mem		
Setting		0; 2 % Unp ⩽ V0mem ⩽ 80 % Unp
Resolution		1 %
Characteristic times		
Operation time		pick-up < 35 ms
Overshoot time		< 35 ms
Reset time		< 35 ms (at T0mem = 0)

(1) *In0 = sensor rating if the measurement is taken by a CSH120 or CSH200 core balance CT.*
In0 = In of the CT if the measurement is taken by a 1 A or 5 A current transformer + CSH30.
In0 = In of the CT /10 if the measurement is taken by a 1 A or 5 A current transformer + CSH30 with the sensitivity x 10 option.

Directional earth fault
ANSI code 67N/67NC

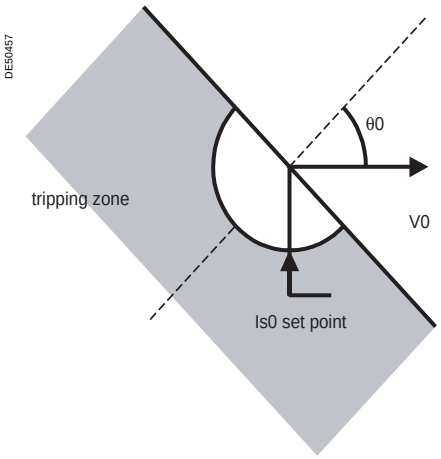

Tripping characteristic of protection 67N, type 2.

Type 2 operation

The protection function operates like an earth fault protection function with an added direction criterion.
It is suitable for closed ring distribution networks with directly earthed neutral. It has all the characteristics of an earth fault protection function (50N/51N) and can therefore be easily coordinated with that function.
The residual current is the current measured at the Sepam I0 input or calculated using the sum of the phase currents, according to the parameter setting.
The time delay may be definite time (DT) or IDMT according to the curves below.
The protection function includes a timer hold delay T1 for the detection of restriking faults.
The tripping direction may be set at the busbar end or line end.

Definite time protection
Is0 is the operation set point expressed in Amps, and T is the protection operation time delay.

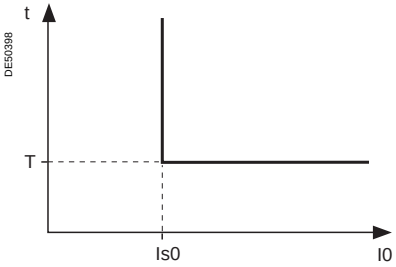

IDMT protection
The IDMT protection function operates in accordance with the IEC 60255-3, BS 142 and IEEE C-37112 standards.

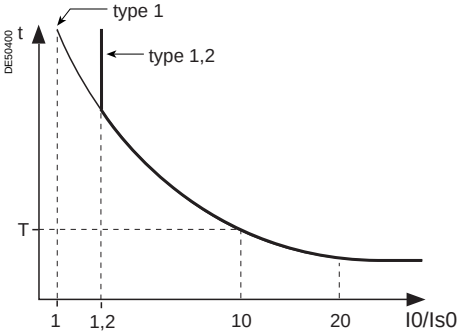

The Is setting is the vertical asymptote of the curve, and T is the operation time delay for 10 Is0.
The tripping time for I0/Is0 values of less than 1.2 depends on the type of curve chosen.

Name of curve	Type
Standard inverse time (SIT)	1.2
Very inverse time (VIT ou LTI)	1.2
Extremely inverse time (EIT)	1.2
Ultra inverse time (UIT)	1.2
RI curve	1
IEC temps inverse SIT / A	1
IEC very inverse time VIT or LTI / B	1
IEC extremely inverse time EIT / C	1
IEEE moderately inverse (IEC / D)	1
IEEE very inverse (IEC / E)	1
IEEE extremely inverse (IEC / F)	1
IAC inverse	1
IAC very inverse	1
IAC extremely inverse	1

The curve equations are given in the chapter entitled "IDMT protection functions".

Directional earth fault
ANSI code 67N/67NC

Block diagram

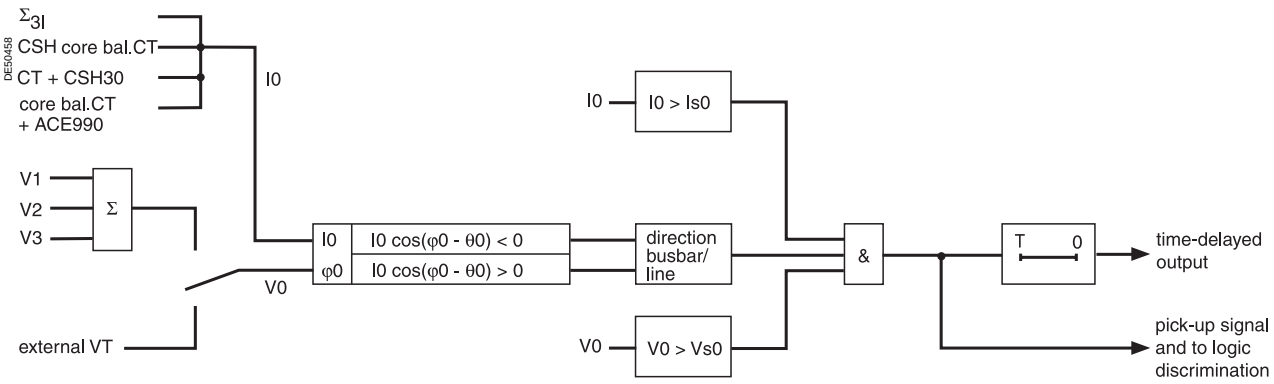

Timer hold delay

The function includes an adjustable timer hold delay T1:

- definite time (timer hold) for all the tripping curves.

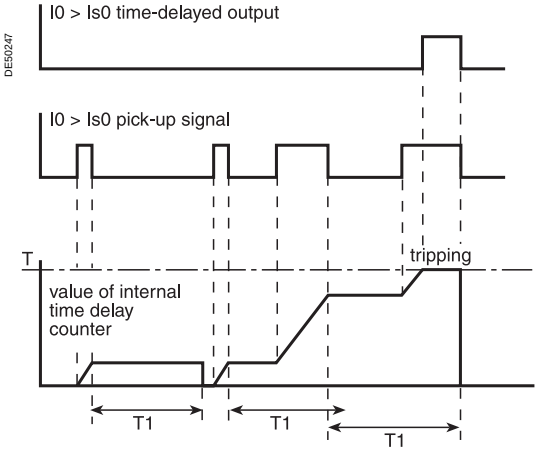

- IDMT for IEC, IEEE and IAC curves.

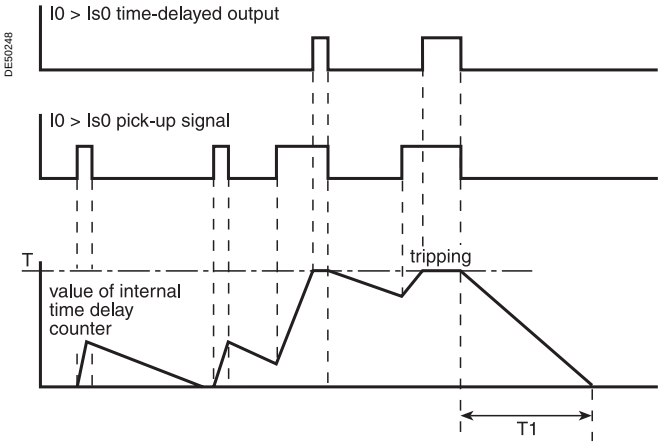

Directional earth fault
ANSI code 67N/67NC

Characteristics type 2

Characteristic angle θ0		
Setting		-45°, 0°, 15°, 30°, 45°, 60°, 90°
Accuracy		±5°
Tripping direction		
Setting		Busbar / line
Is0 setting		
Definite time setting		0.1 In0 ⩽ Is0 ⩽ 15 In0 (1) expressed in Amps
	Sum of CTs	0.1 In0 ⩽ Is0 ⩽ 15 In0
	With CSH sensor	
	2 A rating	0.2 A to 30 A
	5 A rating	0.5 A to 75 A
	20 A rating	2 A to 300 A
	CT + CSH30	0.1 In0 ⩽ Is0 ⩽ 15 In0 (min. 0.1 A)
	Core balance CT with ACE990	0.1 In0 < Is0 < 15 In0
Definite time setting		0.1 In0 ⩽ Is0 ⩽ In0 (1) expessed in Amps
	Sum of CTs	0.1 In0 ⩽ Is0 ⩽ In0
	With CSH sensor	
	2 A rating	0.2 A to 2 A
	5 A rating	0.5 A to 5 A
	20 A rating	2 A to A
	CT + CSH30	0.1 In0 ⩽ Is0 ⩽ 1 In0 (min. 0.1 A)
	Core balance CT with ACE990	0.1 In0 ⩽ Is0 ⩽ In0
Resolution		0.1 A or 1 digit
Accuracy (2)		±5 %
Drop out/pick up ratio		93.5 % ±5 %
Vs0 set point		
Setting		2 % Un to 80 % Un
Resolution		1 %
Accuracy		±5 %
Sector		
Setting		86°; 83°; 76°
Accuracy		±2°
Time delay T (operation time at 10 Is0)		
Setting	definite time	inst., 50 ms ⩽ T ⩽ 300 s
	IDMT	100 ms ⩽ T ⩽ 12.5 s or TMS (3)
Resolution		10 ms or 1 digit
Accuracy (2)	definite time	2 % or -10 ms to +25 ms
	IDMT	Class 5 or from -10 to +25 ms
Timer hold delay T1		
Definite time (timer hold)		0; 0.50 ms ⩽ T1 ⩽ 300 s
IDMT (4)		0.5 s ⩽ T1 ⩽ 20 s
Characteristic times		
Operation time		pick up < 35 ms at 2 Is0 (typically 25 ms)
		inst. < 50 ms at 2 Is0 (confirmed instantaneous) (typically 35 ms)
Overshoot time		< 35 ms
Reset time		< 40 ms (for T1 = 0)

(1) *In0 = In if the sum of the three phase currents is used for the measurement.*
In0 = sensor rating if the measurement is taken by a CSH120 or CSH200 core balance CT.
In0 = In of the CT if the measurement is taken by a 1 A or 5 A current transformer + CSH30.
In0 = In of the CT /10 if the measurement is taken by a 1 A or 5 A current transformer + CSH30 with the sensitivity x 10 option.
(2) *In reference conditions (IEC 60255-6).*
(3) *Setting ranges in TMS (Time Multiplier Setting) mode*

Inverse (SIT) et IEC SIT/A:	*0.04 to 4.20*
Very inverse (VIT) and IEC VIT/B:	*0.07 to 8.33*
Very inverse (LTI) and IEC LTI/B:	*0.01 to 0.93*
Ext inverse (EIT) and IEC EIT/C:	*0.13 to 15.47*
IEEE moderately inverse:	*0.42 to 51.86*
IEEE very inverse:	*0.73 to 90.57*
IEEE extremely inverse:	*1.24 to 154.32*
IAC inverse:	*0.34 to 42.08*
IAC very inverse:	*0.61 to 75.75*
IAC extremely inverse:	*1.08 to 134.4*

(4) *Only for standardized tripping curves of the IEC, IEEE and IAC types.*

Recloser
ANSI code 79

Definition

Reclaim time
The reclaim time delay is activated by a circuit breaker closing order given by the recloser.
If no faults are detected before the end of the reclaim time delay, the initial fault is considered to have been cleared.
Otherwise a new reclosing cycle is initiated.

Safety time until recloser ready
After manual closing of the circuit breaker, the recloser function is inhibited during this time. If a fault occurs during this time, no reclosing cycles are initiated and the circuit breaker remains permanently open.

Dead time
The cycle n dead time delay is activated by the circuit breaker tripping order given by the recloser in cycle n. The breaking device remains open throughout the time delay.
At the end of the cycle n dead time delay, the n+1 cycle begins, and the recloser orders the closing of the circuit breaker.

Operation

Initialization of the recloser
The recloser is ready to operate if all of the following conditions are met:
- "CB control" function activated and recloser in service
- circuit breaker closed
- safety time until 79 ready elapsed
- none of the recloser inhibition conditions is true (see further on).

The "recloser ready" information may be viewed with the control matrix.

Recloser cycles
- case of a cleared fault:
  - following a reclosing order, if the fault does not appear after the reclaim time has run out, the recloser reinitializes and a message appears on the display (see example 1).
- case of a fault that is not cleared:
  - following instantaneous or time-delayed tripping by the protection unit, activation of the dead time associated with the first active cycle.

At the end of the dead time, a closing order is given, which activates the reclaim time. If the protection unit detects the fault before the end of the time delay, a tripping order is given and the following reclosing cycle is activated.
- after all the active cycles have been run, if the fault still persists, a final trip order is given, a message appears on the display and closing is locked out until acknowledgment takes place, according to the parameter setting of the protection function.
- closing on a fault.

If the circuit breaker closes on a fault, or if the fault appears before the end of the safety time delay, the recloser is inhibited.

Recloser inhibition conditions
The recloser is inhibited according to the following conditions:
- voluntary open or close order
- recloser put out of service
- receipt of a inhibtion order on the logic input
- activation of the breaker failure function (50BF)
- appearance of a switchgear-related fault, such as trip circuit fault, control fault, SF6 pressure drop
- opening of the circuit breaker by a protection unit that does not run reclosing cycles (e.g. frequency protection) pr by external tripping. In such cases, a final trip message appears.

Extension of the dead time
If, during a reclosing cycle, reclosing of the circuit breaker is impossible because breaker recharging is not finished (following a drop in auxiliary voltage, recharging time is longer), the dead time may be extended up to the time at which the circuit breaker is ready to carry out an "Open-Close-Open" cycle. The maximum time addded to the dead time is adjustable (Twait_max). If, at the end of the maximum waiting time, the circuit breaker is still not ready, the recloser is inhibited (see example 4, 5).

Characteristics

Reclosing cycles		Setting
Number of cycles		1 to 4
Activation of cycle 1 (1)	max I 1 to 4	inst. / delayed / no activation
	max I0 1 to 4	inst. / delayed / no activation
	directional max I 1 to 2	inst. / delayed / no activation
	directional max I0 1 to 2	inst. / delayed / no activation
	V_TRIPCB output (logical equation)	activation / no activation
Activation of cycles 2, 3 and 4 (1)	max I 1 to 4	inst. / delayed / no activation
	max I0 1 to 4	inst. / delayed / no activation
	directional max I 1 to 2	inst. / delayed / no activation
	directional max I0 1 to 2	inst. / delayed / no activation
	V_TRIPCB output (logical equation)	activation / no activation
Time delays		
Reclaim time		0.1 to 300 s
Dead time	cycle 1	0.1 to 300 s
	cycle 2	0.1 to 300 s
	cycle 3	0.1 to 300 s
	cycle 4	0.1 to 300 s
Safety time until 79 ready		0 to 60 s
Maximum additional dead time (Twait_max)		0.1 to 60 s
Accuracy	±2 % or 25 ms	
Resolution	10 ms or 1 digit	

***(1)** If a protection function that does not activate reclosing cycles leads to circuit breaker opening, the recloser is inhibited.*

Recloser
ANSI code 79

Example 1: fault cleared after the second cycle

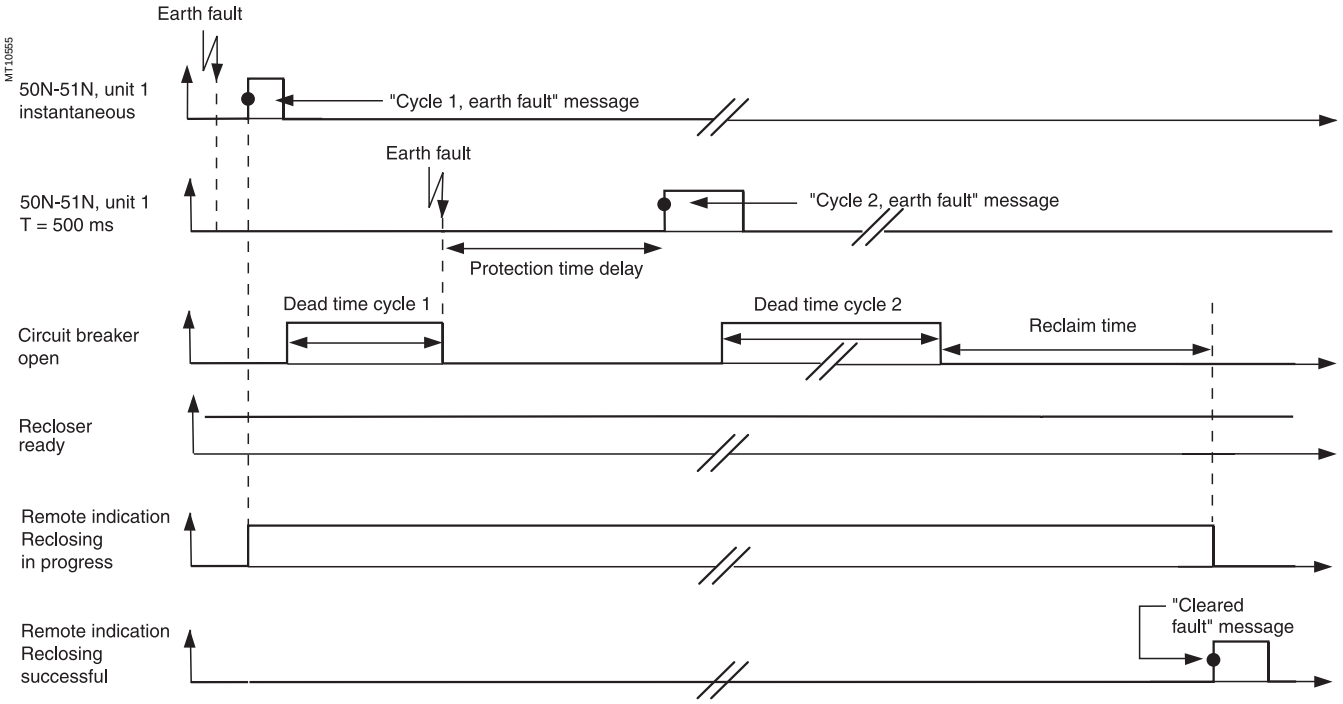

Example 2: fault not cleared

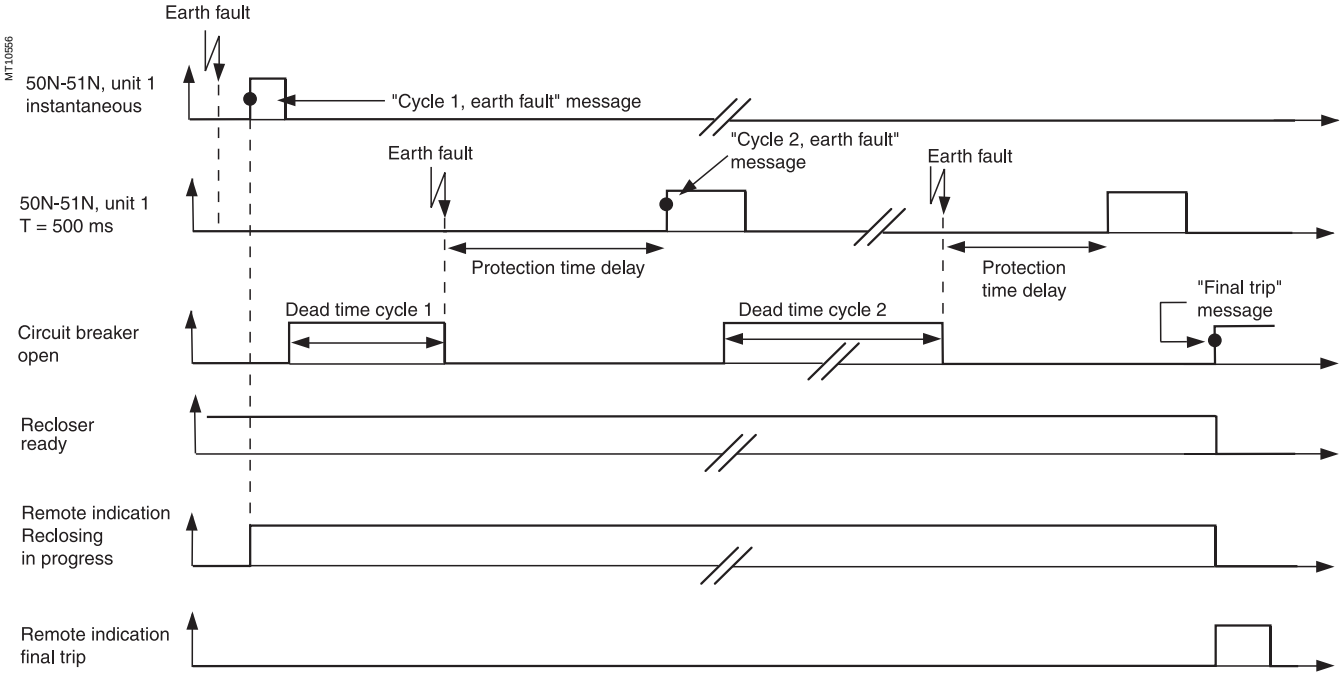

Example 3: closing on a fault

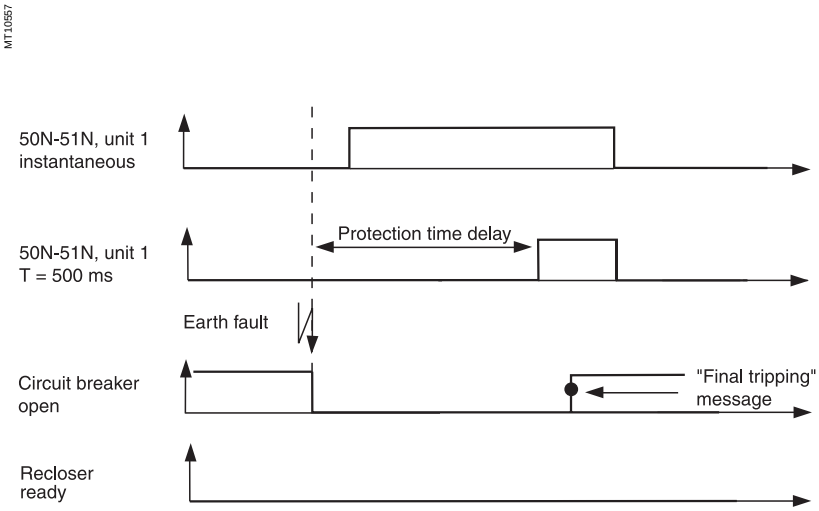

Example 4: no extension of dead time

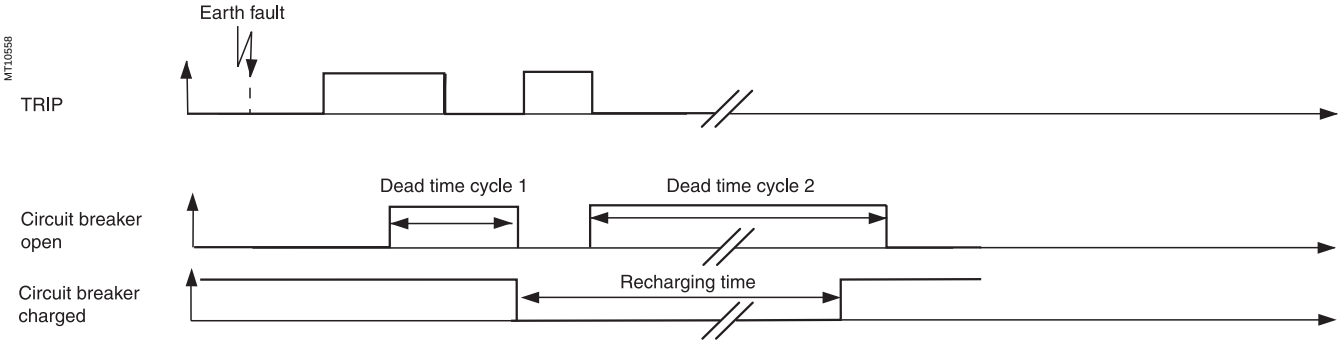

Example 5: extension of dead time

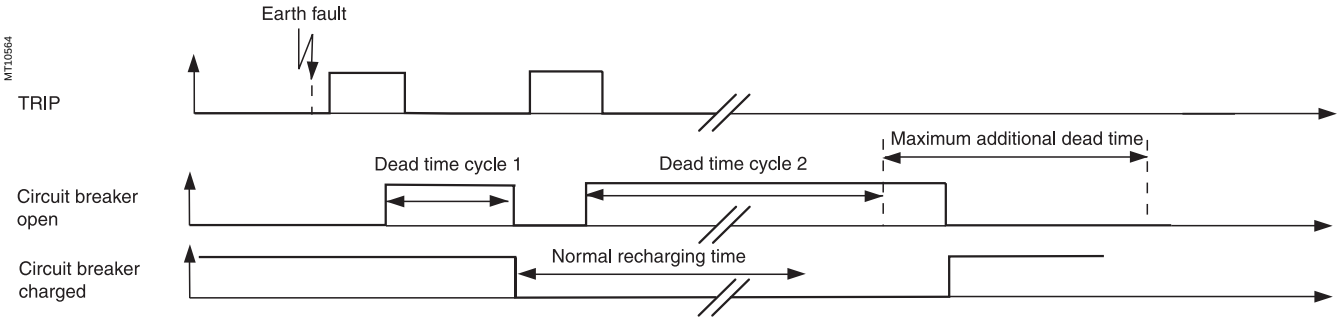

Overfrequency
ANSI code 81H

Operation
The protection function picks up when the positive sequence voltage frequency is above the Fs set point and the positive sequence voltage is above the Vs set point.
If a single VT is connected (U21), the function picks up when the frequency is above the Fs set point and the U21 voltage is above the Vs set point.
It includes a definite time delay T.

Block diagram
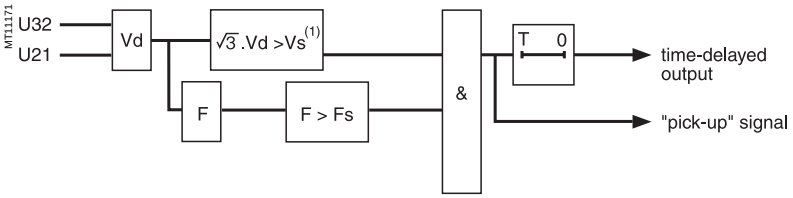

(1) *Or U21 > Vs if only one VT.*

Characteristics

Fs set point	
Setting	50 to 53 Hz or 60 to 63 Hz
Accuracy (1)	±0.02 Hz
Resolution	0.1 Hz
Pick up / drop out difference	0.25 Hz ±0.1 Hz
Vs set point	
Setting	20 % Unp to 50 % Unp
Accuracy (1)	±2 %
Resolution	1 %
Time delay T	
Setting	100 ms to 300 s
Accuracy (1)	±2 % or ±25 ms
Resolution	10 ms or 1 digit
Characteristic times (1)	
Operation time	pick-up < 80 ms (typically 80 ms)
Overshoot time	< 40 ms
Reset time	< 50 ms

(1) *In reference conditions (IEC 60255-6).*

Underfrequency
ANSI code 81L

Operation

The function picks up when the positive sequence voltage frequency is below the Fs set point and if the negative sequence voltage is above the Vs set point.
If a single VT is connected (U21), the function picks up when the frequency is below the Fs set point and the U21 voltage is is above the Vs set point.
It includes a definite time delay T.

The protection function includes a restraint which may be configured according to the rate of change of frequency which inhibits the protection in the event of a continuous decrease in frequency greater than the inhibition set point.
This setting avoids the tripping of all the feeders when the busbar is resupplied by remanent motor voltage following the loss of the incomer.

Block diagram

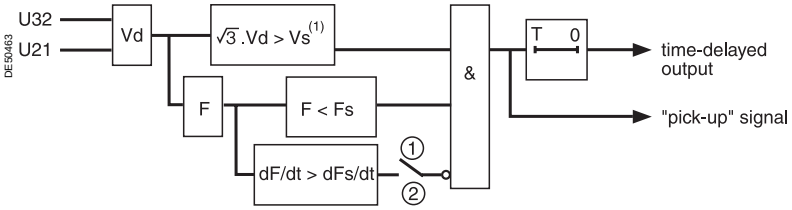

setting: ① without restraint
② with restraint

(1) *Or U21 > Vs if only one VT.*

Characteristics

Fs set point	
Setting	40 to 50 Hz or 50 to 60 Hz
Accuracy (1)	±0.02 Hz
Resolution	0.1 Hz
Pick-up / drop out difference	0.25 Hz ±0.1 Hz
Vs set point	
Setting	20 % Unp to 50 % Unp
Accuracy (1)	2 %
Resolution	1 %
Restraint on frequency variation	
Setting	With / without
dFs/dt set point	1 Hz/s to 15 Hz/s
Accuracy (1)	1 Hz/s
Resolution	1 Hz/s
Time delay T	
Setting	100 ms to 300 s
Accuracy (1)	±2 % or ±25 ms
Resolution	10 ms or 1 digit
Characteristic times (1)	
Operation time	pick-up < 80 ms
Overshoot time	< 40 ms
Reset time	< 50 ms

(1) *In reference conditions (IEC 60255-6).*

General
IDMT protection functions

Operation time depends on the type of protection (phase current, earth fault current, …).
Operation is represented by a characteristic curve:
- t = f(I) curve for the **phase overcurrent** function
- t = f(I0) curve for the **earth fault** function.

The rest of the document is based on t = f(I); the reasoning may be extended to other variables I0,…
The curve is defined by:
- type (standard inverse, very inverse, extremely inverse...)
- current setting Is which corresponds to the vertical asymptote of the curve
- time delay T which corresponds to the operation time for I = 10 Is.

These 3 settings are made chronologically in the following order: type, Is current, time delay T.
Changing the time delay T setting by x % changes all of the operation times in the curve by x %.

Examples of problems to be solved

Problem 1
Knowing the type of IDMT, determine the Is current and time delay T settings.
Theoretically, the current setting Is corresponds to the maximum current that may be permanent: it is generally the rated current of the protected equipment (cable, transformer). .
The time delay T is set to the operation point at 10Is on the curve. This setting is determined taking into account the constraints involved in discrimination with the upstream and downstream protection devices.
The discrimination constraint leads to the definition of point A on the operation curve (IA, tA), e.g. the point that corresponds to the maximum fault current affecting the downstream protection device.

Problem 2
Knowing the type of IDMT, the current setting Is and a point k (Ik, tk) on the operation curve, determine the time delay setting T.
On the standard curve of the same type, read the operation time tsk that corresponds to the relative current

$$\frac{Ik}{Is}$$

and the operation time Ts10 that corresponds to the relative current

$$\frac{I}{Is} = 10$$

The time delay setting that should be made in order for the operation curve to pass through the point k(Ik, tk) is:

$$T = Ts10 \times \frac{tk}{tsk}$$

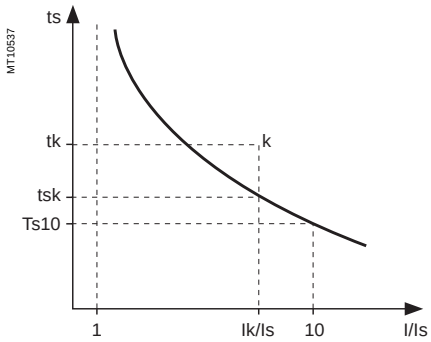

Another practical method:
The table on the next page gives the values of

$$K = \frac{ts}{ts10} \text{ as a function of } \frac{I}{Is}$$

In the column that corresponds to the type of time delay, read the value $K = \frac{tsk}{Ts10}$ in the line for $\frac{Ik}{Is}$

The time delay setting to be used so that the operation curve passes through the point k (Ik, tk) is: $T = \frac{tk}{k}$

Example
Data:
type of time delay: standard inverse time (**SIT**)
set point: Is
a point k on the operation curve: k (3.5 Is; 4 s)

Question: What is the time delay T setting (operation time at 10 Is)?

Reading of the table: **SIT** column
line $\frac{I}{Is} = 3,5$

K = 1.86
Answer: The time delay setting is $T = \frac{4}{1,86} = 2,15s$

Problem 3
Knowing the current Is and time delay T settings for a type of time delay (standard inverse, very inverse, extremely inverse), find the operation time for a current value of IA.
On the standard curve of the same type, read the operation time tsA that corresponds to the relative current

$$\frac{IA}{Is}$$

and the operation time Ts10 that corresponds to the relative current $\frac{I}{Is} = 10$
The operation time tA for the current IA with the Is and T settings is

$$tA = tsA \times \frac{T}{Ts10}$$

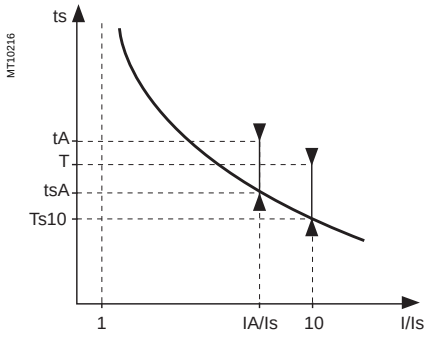

General
IDMT protection functions

Another practical method: the table below gives the values of

$K = \frac{ts}{Ts10}$ as a function of $\frac{I}{Is}$

In the column that corresponds to the type of time delay, read the value $K = \frac{tsA}{Ts10}$

on the line for $\frac{IA}{Is}$

The operation time tA for the current IA with the Is and T settings is **tA = K. T**

Example
Data:
- type of time delay: very inverse time (**VIT**)
- set point: Is
- time delay T = 0.8 s

Question: What is the operation time for the current IA = 6 Is?
Reading of the table: **VIT** column

line $\frac{I}{Is} = 6$

Answer: The operation time for the current IA is t = 1.80 x 0.8 = 1.44 s.

Table of values of K

I/Is	SIT and IEC/A	VIT, LTI and IEC/B	EIT and IEC/C	UIT	RI	IEEE MI (IEC/D)	IEEE VI (IEC/E)	IEEE EI (IEC/F)	IAC I	IAC VI	IAC EI
1.0	—	—	—	—	3.062	—	—	—	62.005	62.272	200.226
1.1	24.700 (1)	90.000 (1)	471.429 (1)	—	2.534	22.461	136.228	330.606	19.033	45.678	122.172
1.2	12.901	45.000	225.000	545.905	2.216	11.777	65.390	157.946	9.413	34.628	82.899
1.5	5.788	18.000	79.200	179.548	1.736	5.336	23.479	55.791	3.891	17.539	36.687
2.0	3.376	9.000	33.000	67.691	1.427	3.152	10.199	23.421	2.524	7.932	16.178
2.5	2.548	6.000	18.857	35.490	1.290	2.402	6.133	13.512	2.056	4.676	9.566
3.0	2.121	4.500	12.375	21.608	1.212	2.016	4.270	8.970	1.792	3.249	6.541
3.5	1.858	3.600	8.800	14.382	1.161	1.777	3.242	6.465	1.617	2.509	4.872
4.0	1.676	3.000	6.600	10.169	1.126	1.613	2.610	4.924	1.491	2.076	3.839
4.5	1.543	2.571	5.143	7.513	1.101	1.492	2.191	3.903	1.396	1.800	3.146
5.0	1.441	2.250	4.125	5.742	1.081	1.399	1.898	3.190	1.321	1.610	2.653
5.5	1.359	2.000	3.385	4.507	1.065	1.325	1.686	2.671	1.261	1.473	2.288
6.0	1.292	1.800	2.829	3.616	1.053	1.264	1.526	2.281	1.211	1.370	2.007
6.5	1.236	1.636	2.400	2.954	1.042	1.213	1.402	1.981	1.170	1.289	1.786
7.0	1.188	1.500	2.063	2.450	1.033	1.170	1.305	1.744	1.135	1.224	1.607
7.5	1.146	1.385	1.792	2.060	1.026	1.132	1.228	1.555	1.105	1.171	1.460
8.0	1.110	1.286	1.571	1.751	1.019	1.099	1.164	1.400	1.078	1.126	1.337
8.5	1.078	1.200	1.390	1.504	1.013	1.070	1.112	1.273	1.055	1.087	1.233
9.0	1.049	1.125	1.238	1.303	1.008	1.044	1.068	1.166	1.035	1.054	1.144
9.5	1.023	1.059	1.109	1.137	1.004	1.021	1.031	1.077	1.016	1.026	1.067
10.0	1.000	1.000	1.000	1.000	1.000	1.000	1.000	1.000	1.000	1.000	1.000
10.5	0.979	0.947	0.906	0.885	0.996	0.981	0.973	0.934	0.985	0.977	0.941
11.0	0.959	0.900	0.825	0.787	0.993	0.963	0.950	0.877	0.972	0.957	0.888
11.5	0.941	0.857	0.754	0.704	0.990	0.947	0.929	0.828	0.960	0.939	0.841
12.0	0.925	0.818	0.692	0.633	0.988	0.932	0.912	0.784	0.949	0.922	0.799
12.5	0.910	0.783	0.638	0.572	0.985	0.918	0.896	0.746	0.938	0.907	0.761
13.0	0.895	0.750	0.589	0.518	0.983	0.905	0.882	0.712	0.929	0.893	0.727
13.5	0.882	0.720	0.546	0.471	0.981	0.893	0.870	0.682	0.920	0.880	0.695
14.0	0.870	0.692	0.508	0.430	0.979	0.882	0.858	0.655	0.912	0.868	0.667
14.5	0.858	0.667	0.473	0.394	0.977	0.871	0.849	0.631	0.905	0.857	0.641
15.0	0.847	0.643	0.442	0.362	0.976	0.861	0.840	0.609	0.898	0.846	0.616
15.5	0.836	0.621	0.414	0.334	0.974	0.852	0.831	0.589	0.891	0.837	0.594
16.0	0.827	0.600	0.388	0.308	0.973	0.843	0.824	0.571	0.885	0.828	0.573
16.5	0.817	0.581	0.365	0.285	0.971	0.834	0.817	0.555	0.879	0.819	0.554
17.0	0.808	0.563	0.344	0.265	0.970	0.826	0.811	0.540	0.874	0.811	0.536
17.5	0.800	0.545	0.324	0.246	0.969	0.819	0.806	0.527	0.869	0.804	0.519
18.0	0.792	0.529	0.307	0.229	0.968	0.812	0.801	0.514	0.864	0.797	0.504
18.5	0.784	0.514	0.290	0.214	0.967	0.805	0.796	0.503	0.860	0.790	0.489
19.0	0.777	0.500	0.275	0.200	0.966	0.798	0.792	0.492	0.855	0.784	0.475
19.5	0.770	0.486	0.261	0.188	0.965	0.792	0.788	0.482	0.851	0.778	0.463
20.0	0.763	0.474	0.248	0.176	0.964	0.786	0.784	0.473	0.848	0.772	0.450

***(1)** Values only suitable for IEC A, B and C curves.*

Standard inverse time SIT curve
Very inverse time VIT or LTI curve

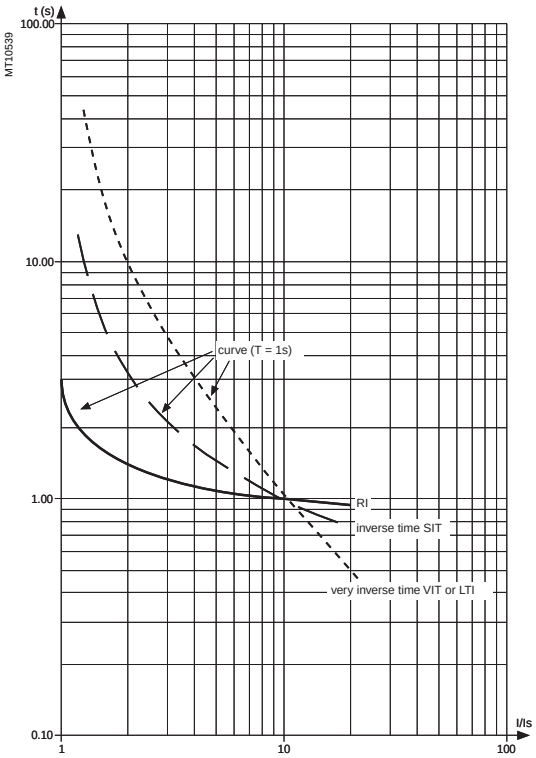

Extremely inverse time EIT curve
Ultra inverse time UIT curve

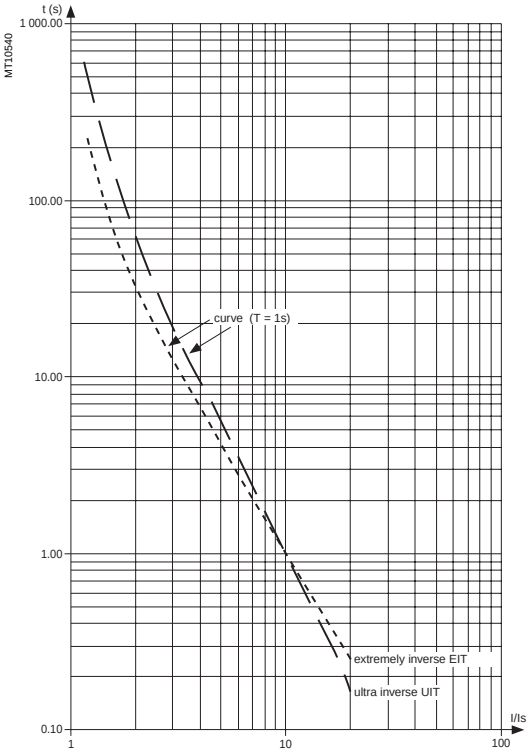

IEEE curves

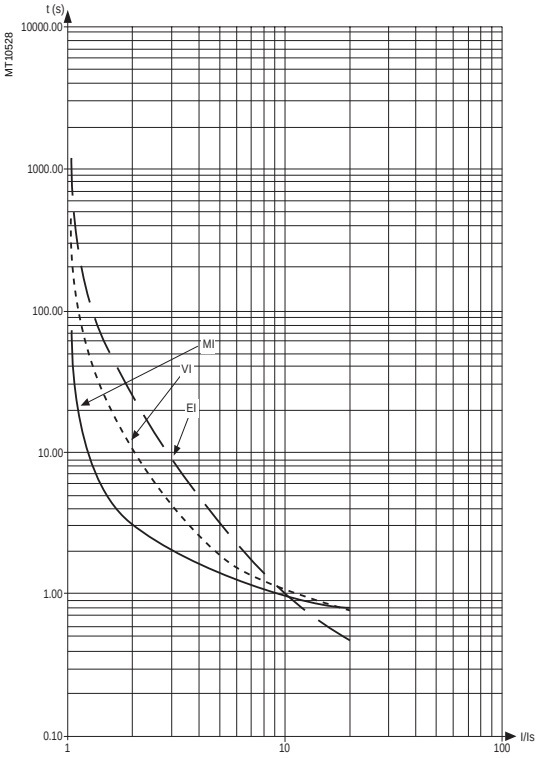

IAC curves

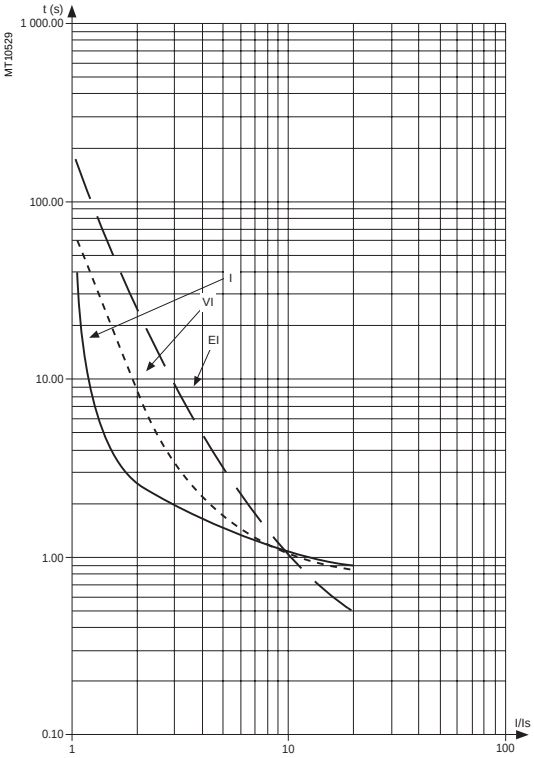

Curve equations

IEC curve, inverse type

$$t_d(I) = \frac{k}{\left(\frac{I}{Is}\right)^{\alpha} - 1} \times \frac{T}{\beta}$$

IEC curve, RI type

$$t_d(I) = \frac{I}{0,339 - 0,236\left(\frac{I}{I_s}\right)^{-1}} \times \frac{T}{3,1706}$$

Characteristic curves	k	α	β
IEC standard inverse / A	0.14	0.02	2.97
IEC very inverse / B	13.5	1	1.50
IEC long time inverse / B	120	1	13.33
IEC extremely inverse / C	80	2	0.808
IEC ultra inverse	315.2	2.5	1

IEEE curve

with

$$t_d(I) = \left(\frac{A}{\left(\frac{I}{I_s}\right)^{P} - 1} + B\right) \times \frac{T}{\beta}$$

Characteristic curves	A	B	p	β
IEEE moderately inverse	0.010	0.023	0.02	0.241
IEEE very inverse	3.922	0.098	2	0.138
IEEE extremely inverse	5.64	0.0243	2	0.081

IAC curve

with

$$t_d(I) = \left(A + \frac{B}{\left(\frac{I}{Is} - C\right)} + \frac{D}{\left(\frac{I}{Is} - C\right)^2} + \frac{E}{\left(\frac{I}{Is} - C\right)^3}\right) x \frac{T}{\beta}$$

Characteristic curves	A	B	C	D	E	β
IAC inverse	0.208	0.863	0.800	-0.418	0.195	0.297
IAC very inverse	0.090	0.795	0.100	-1.288	7.958	0.165
IAC extremely inverse	0.004	0.638	0.620	1.787	0.246	0.092

Example:

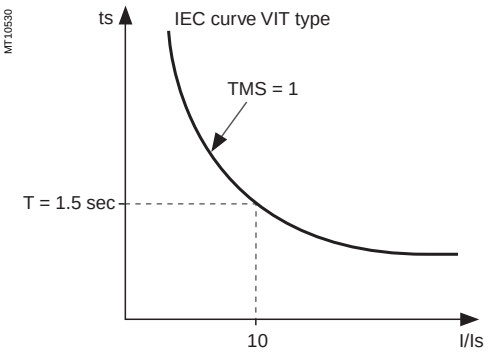

TMS multiplying factor

The time delay of IDMT tripping curves
(except for RI curve) may be set:

- either by T sec (operation time at 10 x Is)
- or by TMS (factor that corresponds to $\frac{T}{\beta}$ in the equations above).

Example :

$$t(I) = \frac{13,5}{\left(\frac{I}{Is}\right) - 1} \times TMS \quad \text{with: } TMS = \frac{T}{1,5}$$

The IEC curve of the VIT type is positioned so as to be the same with TMS = 1 or T = 1.5 sec.

example:

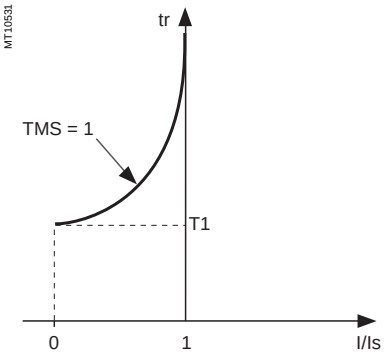

Timer hold delay T1

- definite time :

enables the function to be activated with intermittent faults

- IDMT:

makes it possible to emulate an electromagnetic disk protection relay.

$$t_r(I) = \frac{T1}{1 - \left(\frac{I}{Is}\right)^2} \times \frac{T}{\beta} \quad \text{with : } \frac{T}{\beta} = TMS$$

T1 = timer hold delay setting (timer hold delay for I reset = 0 and TMS = 1)
T = tripping time delay setting (at 10 Is)
β = basic tripping curve value at $10Is = \frac{k}{10^{\alpha} - 1}$

The standardized or estimated values of T1 are available in the SFT2841 software help.

Contents

Presentation

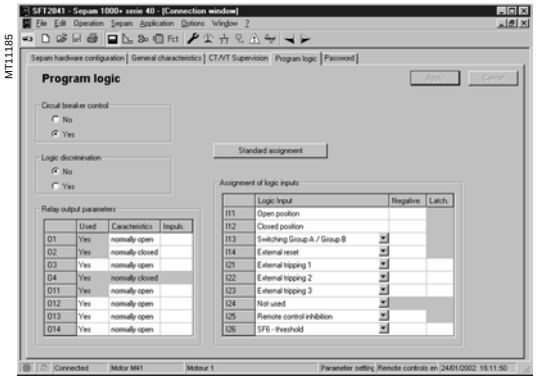

Program logic parameter setting.

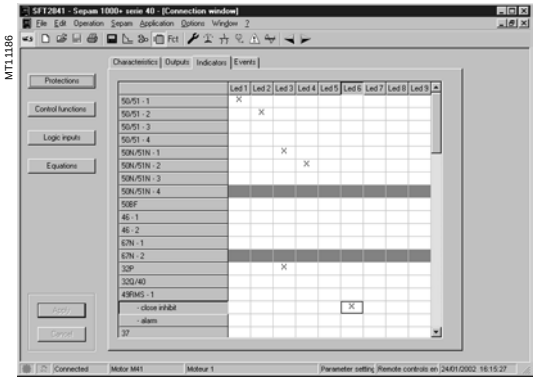

Control matrix.

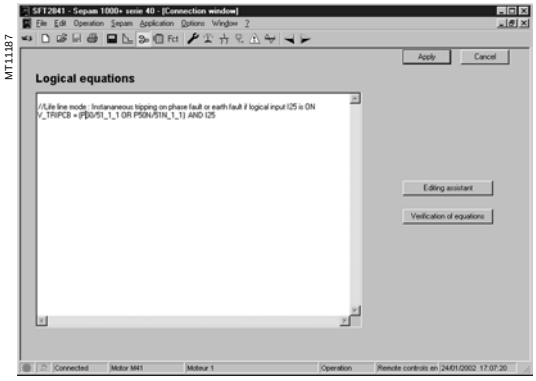

Control matrix.

Sepam series 40 performs the basic control and monitoring functions required for the operation of the electrical network, thereby reducing the need for auxiliary relays.

Predefined functions
Each Sepam includes the appropriate control and monitoring functions for the chosen application. The use of the functions calls for exclusive parameter setting and special wiring of the inputs and outputs.
For easier commissioning, the functions have default settings that may be used for the most frequent applications.

Choice of inputs
The inputs to be used are chosen from a list of available functions, which covers the whole range of possible uses.

Control matrix
A control matrix may be used to assign the logic outputs, indicators and alarms to the Sepam function outputs. The matrix may be adapted using the SFT2841 software tool. This includes adapting the meaning of the signal lamps on the front panel or creating the user's own circuit breaker control function if the predefined function is not suitable.

Logical equation editor
The equation editor may be used to adapt the predefined functions by means of simple logical functions, so as to add new processing operations or new indications.

Control matrix
A control matrix may be used to assign logic outputs, indicators and alarms to the Sepam function outputs. The matrix may be adapted using the SFT2841 software tool. This includes adapting the meaning of the signal lamps on the front panel or creating the user's own circuit breaker control function if the predefined function is not suitable.

Assignment of logic inputs outputs

Assignment by application chart

Functions	S40, S41	S42	T40, T42	M41	G40	Assignment
Logic inputs						
Open position	■	■	■	■	■	I11
Closed position	■	■	■	■	■	I12
Logic discrimination, blocking reception 1	■	■	■		■	Free
Logic discrimination, blocking reception 2		■				Free
Switching of groups of settings A/B	■	■	■	■	■	I13
External reset	■	■	■	■	■	Free
External tripping 1	■	■	■	■	■	Free
External tripping 2	■	■	■	■	■	Free
External tripping 3	■	■	■	■	■	Free
Buchholz/gas tripping			■			Free
Thermostat tripping			■			Free
Pressure tripping			■			Free
Thermistor tripping			■	■	■	Free
Buchholz/gas alarm			■			Free
Thermostat alarm			■			Free
Pressure alarm			■			Free
Thermistor alarm			■	■	■	Free
End of charging position	■	■	■	■	■	Free
Inhibit remote control	■	■	■	■	■	Free
SF6	■	■	■	■	■	Free
Inhibit recloser	■	■				Free
External synchronization	■	■	■	■	■	I21
Inhibit thermal overload			■	■	■	Free
Switching of thermal settings			■	■	■	Free
Motor re-acceleration				■		Free
Rotor rotation detection				■		Free
Inhibit undercurrent				■		Free
Inhibit closing	■	■	■	■	■	Free
Open order	■	■	■	■	■	Free
Close order	■	■	■	■	■	Free
Phase voltage transformer fuse melting	■	■	■	■	■	Free
Residual voltage transformer fuse melting	■	■	■	■	■	Free
External positive active energy counter	■	■	■	■	■	Free
External negative active energy counter	■	■	■	■	■	Free
External positive reactive energy counter	■	■	■	■	■	Free
External negative reactive energy counter	■	■	■	■	■	Free
Logic outputs						
Tripping	■	■	■	■	■	O1
Inhibit closing	■	■	■	■	■	O2
Watchdog	■	■	■	■	■	O4
Close order	■	■	■	■	■	O11

NB: *All of the logic inputs are available via the communication link and are accessible in the SFT2841 matrix for other non predefined applications.*

Standard assignment

Functions	S40, S41	S42	T40, T42	M41	G40	Assignment
Logic inputs						
Open position	■	■	■	■	■	I11
Closed position	■	■	■	■	■	I12
Logic discrimination, blocking reception 1	■	■	■		■	I13
Logic discrimination, blocking reception 2		■				I21
Switching of groups of settings A/B				■		I13
External reset	■	■	■	■	■	I14
External tripping 1	■			■	■	I21
External tripping 2	■	■		■	■	I22
External tripping 3	■	■		■	■	I23
Buchholz/gas tripping			■			I21
Thermostat tripping			■			I22
Buchholz/gas alarm			■			I23
Thermostat alarm			■			I24
Inhibit remote control	■	■	■	■	■	I25
SF6	■	■	■	■	■	I26

Circuit breaker / contactor control

Description

Sepam is used to control breaking devices equipped with different types of closing and tripping coils:
■ circuit breakers with shunt trip or undervoltage trip units (parameter setting of O1 in the front of the advanced UMI or using SFT2841)
■ latching contactors with shunt trip units.

Integrated circuit breaker / contactor control

This function controls the breaking device. It is coordinated with the recloser and logic discrimination functions and includes the anti-pumping function.
It performs the following operations according to the parameter setting:
■ tripping on output O1 by:
□ protection unit (units configured to trip the circuit breaker)
□ logic discrimination
□ remote control via the communication link
□ external protection
□ open order by logic input
■ closing on output O11 by:
□ recloser
□ remote control via the communication link (remote control may be inhibited by the "inhibit remote control" logic input)
□ closing control by logic input
■ inhibition of closing on output O2 by:
□ trip circuit fault (TCS)
□ SF6 fault
□ inhibit order by logic input.

Block diagram

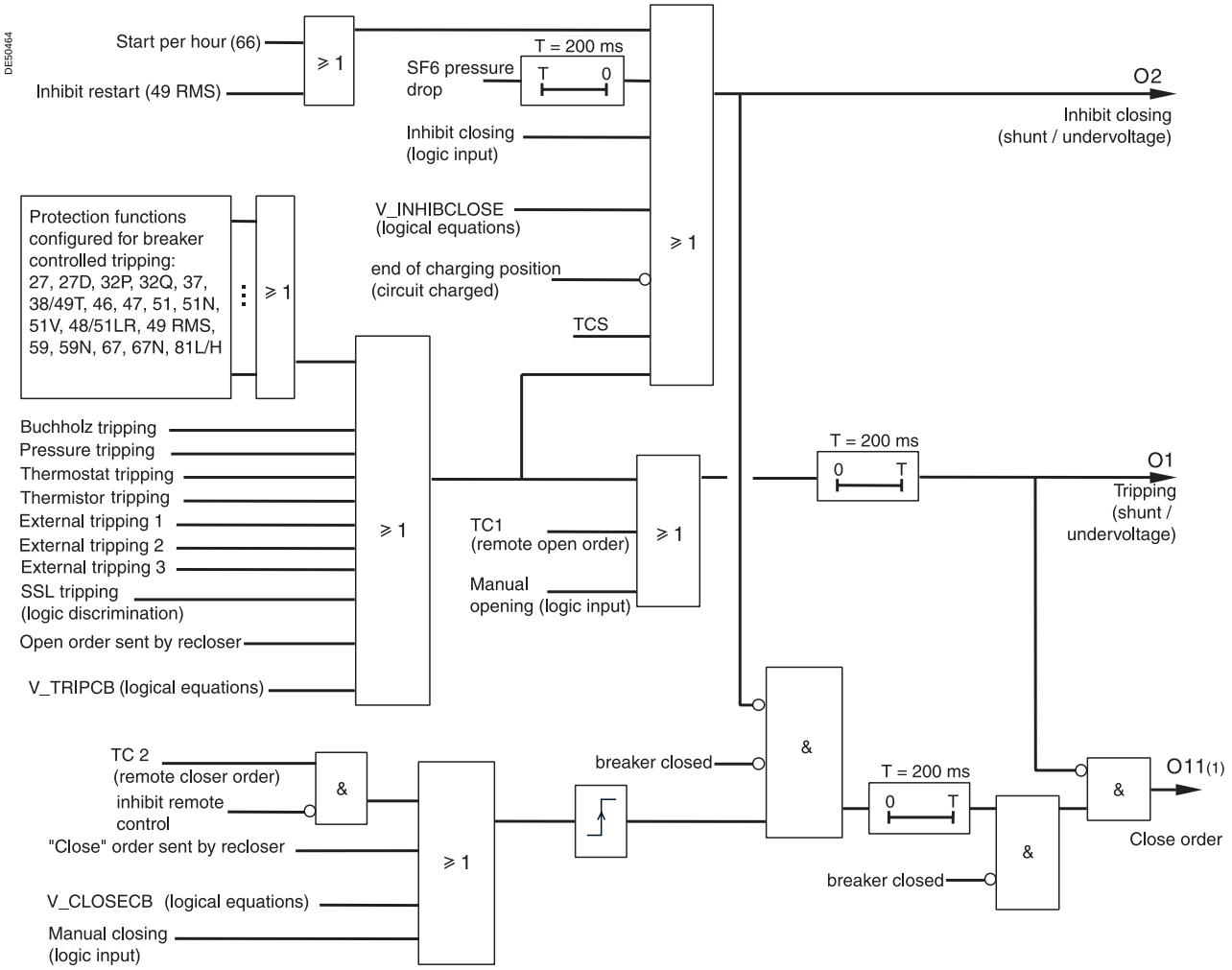

***(1)** The close order is only available when the MES114 option is included.*

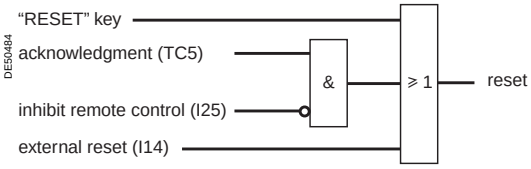

Latching / acknolwedgment

The functions that trigger tripping may be latched individually at the time of parameter setting and reset according to different modes.
Latched tripping orders are stored and must be acknowledged for the device to be put back into service. Latching is stored in the event of a power outage.
Acknowledgment may be done locally on the UMI or remotely through a logic input or via the communication link.
The remote indication TS104 remains present after latching operations until acknowledgment has taken place.

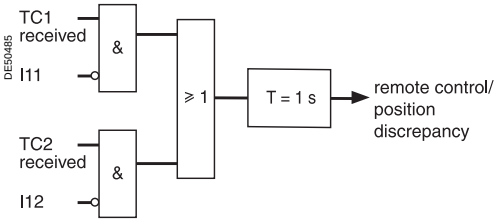

TC / circuit breaker position discrepancy

This function detects a discrepancy between the last remote control order received and the actual position of the circuit breaker.
The information is accessible in the matrix and via remote indication TS105.

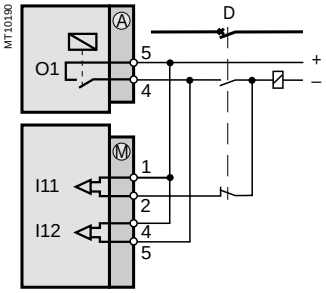

Wiring for shunt trip unit.

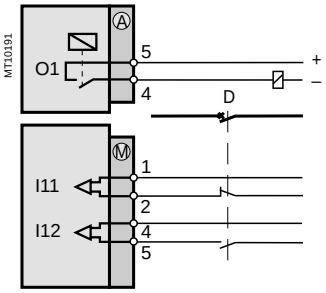

Wiring for undervoltage trip unit.

Trip circuit supervision and open / closed matching

Description

This supervision is designed for trip circuits:
- ■ with shunt trip units

The function detects:
- □ circuit continuity
- □ loss of supply
- □ mismatching of position contacts.

The function inhibits closing of the breaking device.
- ■ with undervoltage trip units

The function detects:
- □ mismatching of position contacts, coil supervision being unnecessary in this case.

The information is accessible in the matrix and via the remote indication TS106.

Block diagram

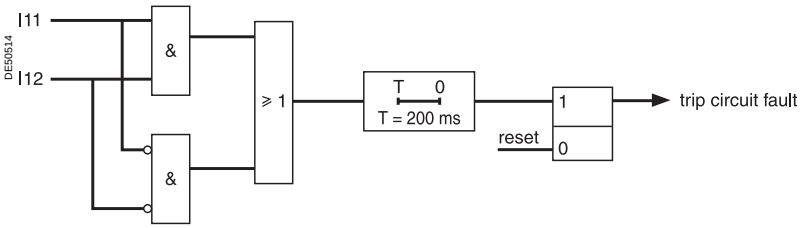

Open and close order supervision

Following a circuit breaker open or close order, the system checks whether, after a 200 ms time delay, the circuit breaker has actually changed status.
If the circuit breaker status does not match the last order sent, a "Control fault" message and remote indication TS108 are generated.

Logic discrimination
Radial network

Application

This function provides:
- full tripping discrimination
- a substantial reduction in delayed tripping of the circuit breakers located nearest the source (drawback of the classical time-based discrimination process).

The system applies to the definite time (DT) and IDMT (standard inverse time SIT, very inverse time VIT, extremely inverse time EIT and ultra inverse time UIT) phase overcurrent, earth fault and directional protection functions.

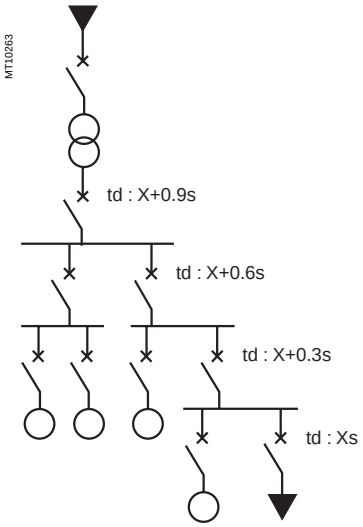

e.g. radial distribution with use of time-based discrimination (td: tripping time definite time curves).

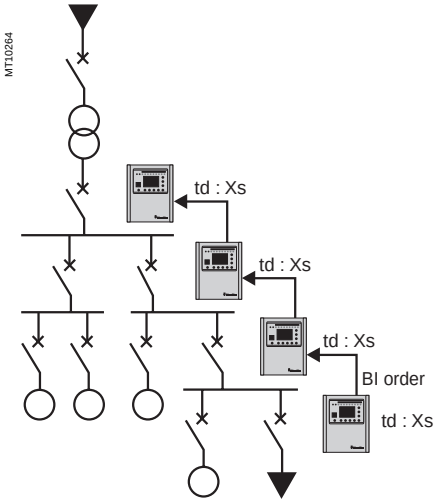

e.g.: radial distribution with use of the Sepam logic discrimination system.

With this type of system, time delays are set in accordance with the device to be protected, without any concern for the discrimination aspect.

Operating principle

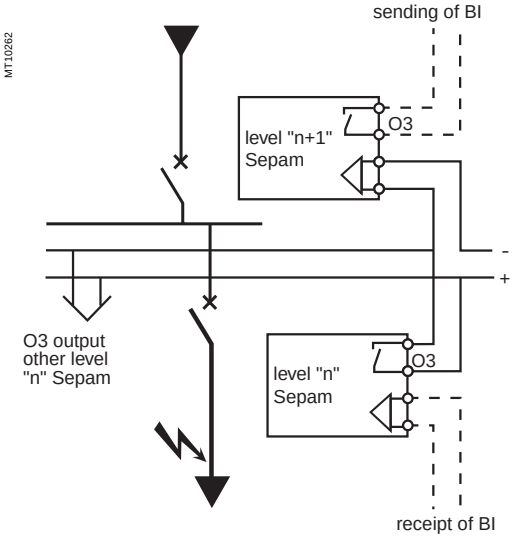

When a fault occurs in a radial network, the fault current flows through the circuit between the source and the location of the fault:
- the protection units upstream from the fault are triggered
- the protection units downstream from the fault are not triggered
- only the first protection unit upstream from the fault should trip.

Each Sepam is capable of sending and receiving blocking information except for motor Sepams (1) which can only send blocking information.
When a Sepam is triggered by a fault current:
- it sends a blocking information to output O3 (2)
- it trips the associated circuit breaker if it does not receive a blocking information on the logic input assigned to "blocking reception" (3).

The sending of the blocking information lasts the time it takes to clear the fault.
It is interrupted after a time delay that takes into account the breaking device operating time and protection unit reset time.
This system minimizes the duration of the fault, optimizes discrimination and guarantees safety in downgraded situations (wiring or switchgear failure).

Pilot wire test

The pilot wire test may be performed using the output relay test function.

(1) *Motor Sepams are not affected by the receipt of a blocking information since they are designed for loads only.*
(2) *Default parameter setting.*
(3) *According to parameter setting and presence of an additional MES114 module.*

Logic discrimination
Radial network

Block diagram: Sepam S40, S41, T40, T42, G40

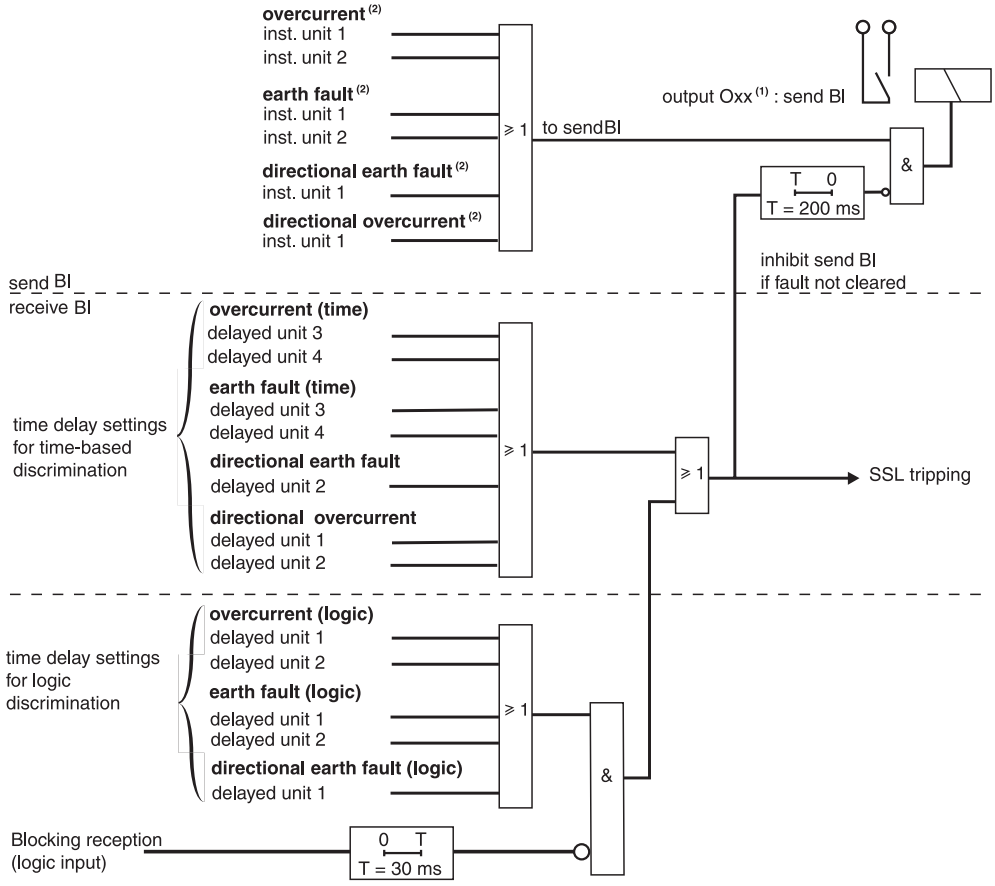

Block diagram: Sepam M41

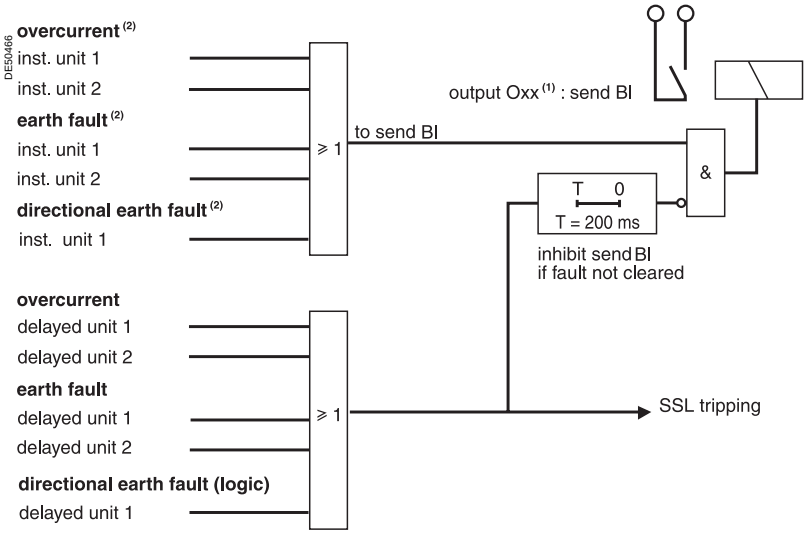

The protection units must be configured to trip the circuit breaker in order to be taken into account in logic discrimination.

(1) *According to parameter setting (O3 by default).*
(2) *Instantaneous action (inst) corresponds to protection "pick up" signal information.*

Logic discrimination
Closed ring network

Application

Closed ring network protection may be provided using Sepam S42, which includes the following functions:

■ 2 units of directional phase (67) and earth fault (67N) protection functions:

□ a unit to detect faults located in the "line" direction

□ a unit to detect faults located in the "busbar" direction

■ doubled logic discrimination function, with:

□ sending of 2 blocking information, according to the direction of the fault detected

□ receipt of 2 blocking information to block the directional protection relays according to their detection direction.

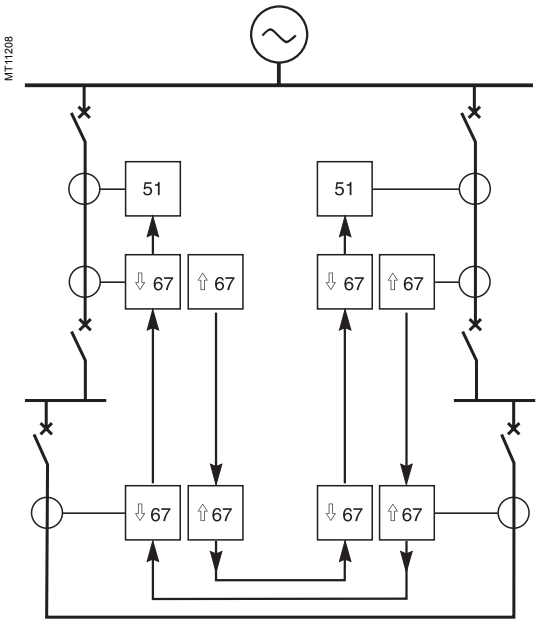

⇩, ⇧ : *direction of 67/67N protection functions*

↑ : *direction of blocking signals*

With the combination of the directional protection functions and the logic discrimination function, the faulty section may be isolated with minimum delay by the tripping of the circuit breakers on either side of the fault.

Blocking information are prepared by protection functions 67 and 67N.
Priority is given to protection function 67: when protection functions 67 and 67N detect faults in opposite directions at the same time, the blocking information is determined by the direction of the fault detected by protection function 67.

The instantaneous output of protection function 67, activated at 80 % of the Is set point, is used to send blocking information. This avoids uncertainly when the fault current is close to the Is set point.

Block diagram: Sepam S42

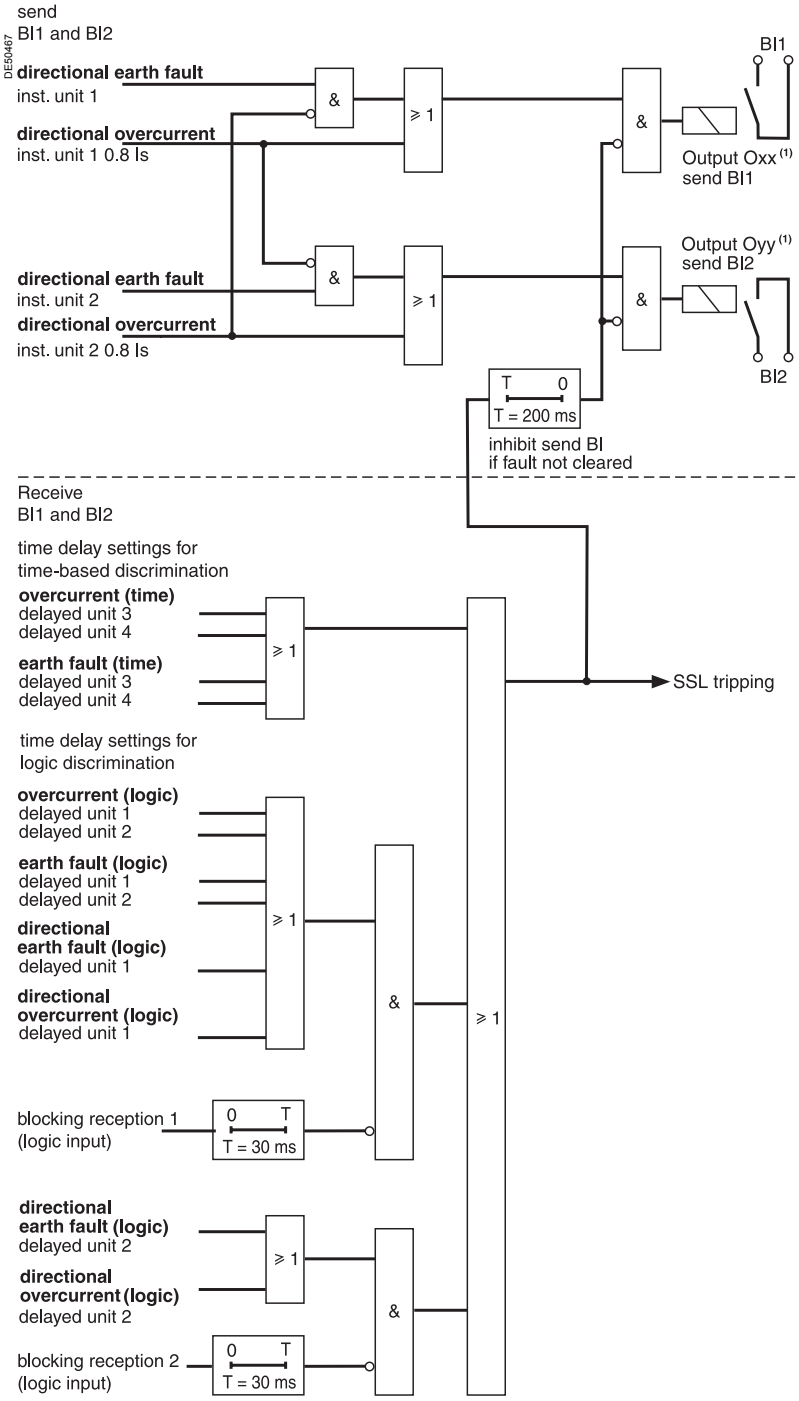

(1) According to parameter setting (by default): O3 for send BI1 and O12 for send BI2.

Logic discrimination
Closed ring network

Example of closed ring protection function setting:

Case of a closed ring with two substations, each of which comprises two Sepam S42 relays, marked R11, R12 and R21, R22.

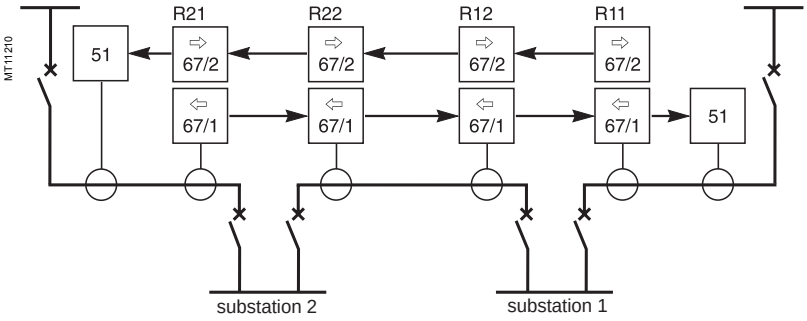

⇨, ⇦ : *direction of 67/67N protection functions*

↑ : *direction of blocking signals*

Starting at one end of the ring, the detection direction of units 1 and 2 of the directional protection functions should be alternated between line and busbar.

Example of setting of the different Sepam with logic discrimination:

Substation 1	
Sepam S42 no. R11	**Sepam S42 no. R12**
■ Logic input/output assignment: I13: blocking reception 1 O3: send blocking information BI1 O12: send blocking information BI2	■ Logic input/output assignment: I13: blocking reception 1 I14: blocking reception 2 O3: send blocking information BI1 O12: send blocking information BI2
■ 67, 67N, unit 1: tripping direction = busbar ■ 67, 67N, unit 2: tripping direction = line	■ 67, 67N, unit 1: tripping direction = line ■ 67, 67N, unit 2: tripping direction = busbar
Substation 2	
Sepam S42 no. R22	**Sepam S42 no. R21**
■ Logic input/output assignment: I13: blocking reception 1 I14: blocking reception 2 O3: send blocking information BI1 O12: send blocking information BI2	■ Logic input/output assignment: I13: blocking reception 1 O3: send blocking information BI1 O12: send blocking information BI2
■ 67, 67N, unit 1: tripping direction = busbar ■ 67, 67N, unit 2: tripping direction = line	■ 67, 67N, unit 1: tripping direction = line ■ 67, 67N, unit 2: tripping direction = busbar

Logic discrimination
Substation with 2 parallel incomers

Application
Substations supplied by 2 (or more) parallel incomers may be protected using Sepam S42 or Sepam T42, by a combination of directional phase (67) and earth fault (67N) protection functions, with the logic discrimination function.

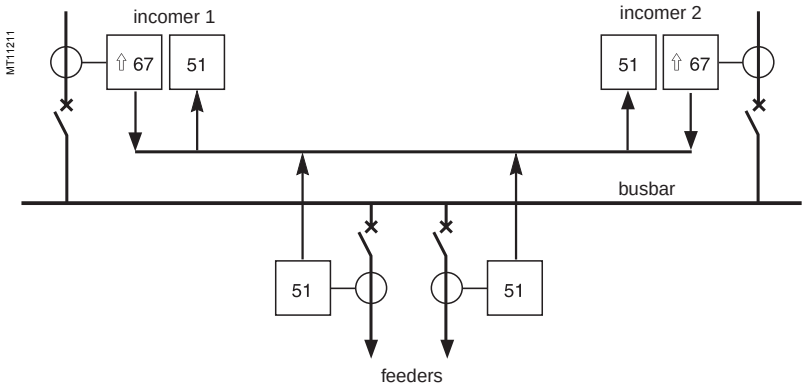

⇧ *: direction of 67/67N protection functions*

↑ *: direction of blocking signals*

To avoid both incomers tripping when a fault ocurs upstream from one incomer, the incomer protection devices must operate as follows:
■ protection 67 of the faulty incomer detects the fault current in the "line" direction, the protection tripping direction:
□ sends a blocking information to inhibit the phase overcurrent protection functions (50/51) of both incomers
□ and trips the incomer circuit breaker
■ protection function 67 of the fault-free incomer is insensitive to fault current in the "busbar" direction.

Examples of parallel incomer protection function setting

Protection by Sepam S42
■ logic input/output assignment:
□ I13: blocking reception 1 - **Do not assign any inputs to blocking reception 2**
□ O3: send blocking information BI1
■ protection function 67 unit 1: tripping direction = line
□ instantaneous output: send blocking information BI1
□ time-delayed output: inhibited by receipt of BI1 on I13
■ protection function 67, unit 2: tripping direction = line
□ time-delayed output: tripping of circuit breaker triggered by fault upstream from incomer (not inhibited since no input is assigned to blocking reception 2).

Protection by Sepam T42
■ logic input/output assignment:
□ I13: blocking reception 1
□ O3: send blocking information BI1
■ protection function 67 unit 1: tripping direction = line
□ instantaneous output: send blocking information BI1
□ time-delayed output: tripping of circuit breaker triggered by a fault upstream from the incomer (not inhibited by the receipt of BI1 on I13)
■ protection function 67, unit 2: if necessary.

Disturbance recording triggering
Switching of groups of settings

Disturbance recording triggering

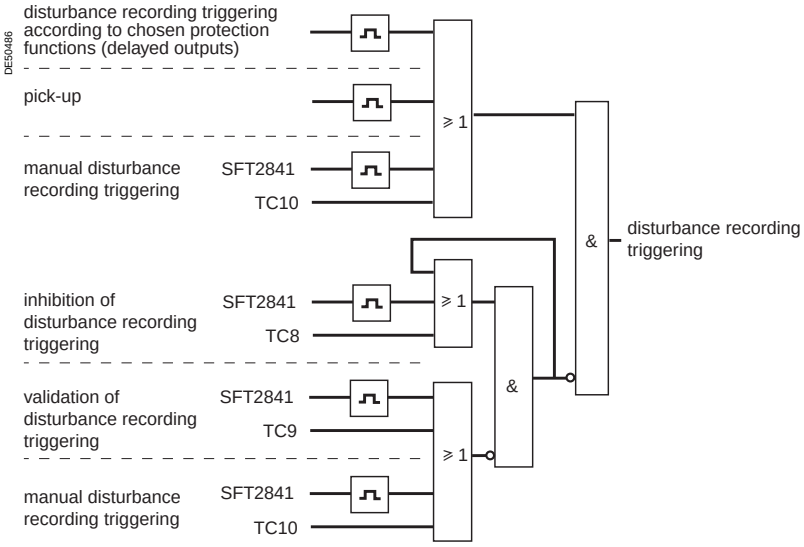

Switching of groups of settings

There are two groups of settings, group A / group B, for the phase overcurrent, earth fault and, directional phase overcurrent and directional earth fault protection functions. Switching from one group of settings to another makes it possible to adapt the protection characteristics to suit the electrical environment of the application (change of earthing system, transition to local production, ...). The switching of settings is global and therefore applies to all the units of the protection functions mentioned above.

The setting switching mode is determined by parameter setting:

- switching according to the position of logic input I13 (0 = group A, 1 = group B)
- switching by remote control (TC3, TC4)
- forced group A or group B.

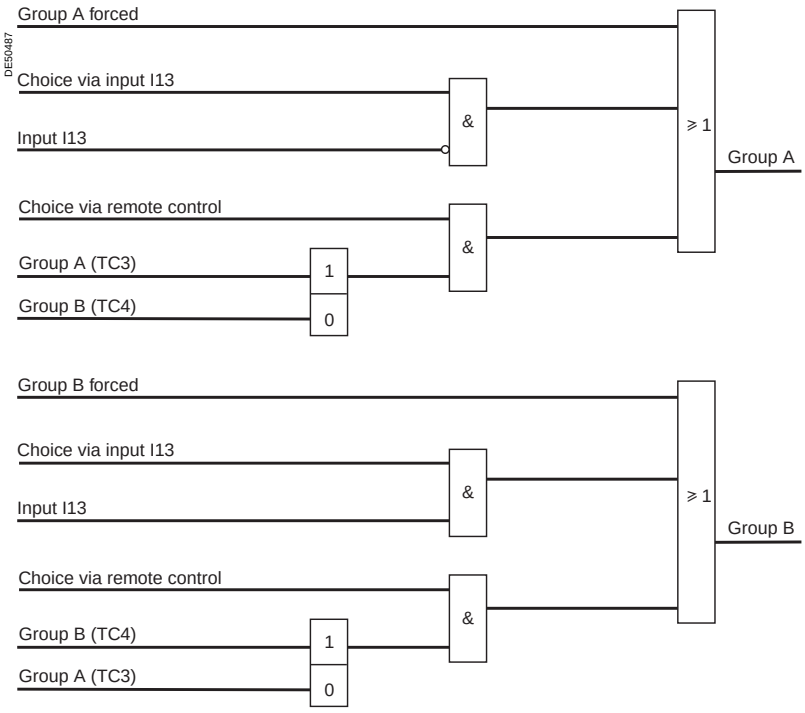

Local indication

Events may be indicated on the front panel of Sepam by:
- appearance of a message on the display of the advanced UMI
- lighting up of one of the 9 yellow signal lamps.

Message type indication

Predefined messages
All the messages connected to the standard Sepam functions are predefined and available in two language versions:
- in English, factory messages, not modifiable
- in the local language, according to the version delivered.

The language version is chosen at the time of Sepam parameter setting.
The messages are visible on the display units of Sepams equipped with the advanced UMI and in the SFT2841 Alarms screen.
- the number and type of predefined messages depend on type of Sepam. The table below gives the complete list of all predefined messages.

Functions	**English** (factory)	**Local language** (e.g. French)
Phase overcurrent	PHASE FAULT (2)	DEFAUT PHASE (2)
Voltage-restrained phase overcurrent	O/C V REST (2)	DEF. PHASE RET.U (2)
Earth fault	EARTH FAULT	DEFAUT TERRE
Circuit breaker failure	BREAKER FAILURE	DEF. DISJONCTEUR
Unbalance / negative sequence	UNBALANCE I	DESEQUILIBRE I
Directional phase overcurrent	DIR. PHASE FAULT (2)	DEFAUT PHASE DIR. (2)
Directional earth fault	DIR. EARTH FAULT	DEFAUT TERRE DIR.
Active overpower	REVERSE P	RETOUR P
Reactive overpower	REVERSE Q	RETOUR Q
Thermal overload	THERMAL ALARM THERMAL TRIP	ECHAUF^{T}. ALARME ECHAUF^{T}. DECL^{T}.
Locked rotor / Locked rotor at startup	ROTOR BLOCKING ST^{RT} LOCKED ROT^{R}.	BLOCAGE ROTOR BLOC ROTOR DEM
Excessive starting time	LONG START	DEMARRAGE LONG
Number of starts	START INHIBIT	DEMARRAGE INHIBE
Phase undercurrent	UNDER CURRENT	COURANT <<
Overvoltage	OVERVOLTAGE (3)	TENSION >> (3)
Undervoltage	UNDERVOLTAGE (3)	TENSION << (3)
Positive sequence undervoltage	UNDERVOLT. PS ROTATION -	TENSION Vd<< ROTATION -
Neutral voltage displacement	V0 FAULT	DEFAUT V0
Overfrequency	OVER FREQ.	FREQUENCE >>
Underfrequency	UNDER FREQ.	FREQUENCE <<
Negative sequence overvoltage	UNBALANCE V	DESEQUILIBRE V
Temperature (RTDs) (1)	OVER TEMP. ALM OVER TEMP. TRIP RTD'S FAULT (1 to 2)	T° ALARME T°. DECL^{T}. DEFAUT SONDES (1 à 2)
Thermostat	THERMOS^{T}. ALARM THERMOS^{T}. TRIP	THERM^{OT}. ALARME THERMOS^{T}. DECL^{T}.
Buchholz	BUCHHOLZ ALARM BUCHH/GAS TRIP	BUCHH ALARME BUCHH/GAZ DECL^{T}.
Pressure	PRESSURE ALM. PRESSURE TRIP	PRESSION ALARME PRESSION DECL^{T}.
Thermistor PTC/NTC	THERMIS^{T}. ALARM THERMIS^{T}. TRIP	THERMIS^{IST}. ALARME THERMIS^{T}. DECL^{T}.
External tripping x (1 to 3)	EXT. TRIP x (1 to 3)	DECL^{T}. EXT. x (1 à 3)
Trip circuit supervision	TRIP CIRCUIT	CIRCUIT DECL^{T}.
Circuit breaker control	CONTROL FAULT	DEFAUT COM^{DE}.
Recloser	CYCLE x (1 to 4) (4)	CYCLE x (1 à 4) (4)
Recloser	FINAL TRIP	DECL^{T} DEFINITIF.
Recloser	CLEARED FAULT	DEFAUT ELIMINE
SF6	SF6 LOW	BAISSE SF6
Phase VT supervision	VT FAULT	DEFAUT TP
V0 VT supervision	VT FAULT V0	DEFAUT TP V0
CT supervision	CT FAULT	DEFAUT TC

(1) *RTD FAULT message: refer to the maintenance chapter.*
(2) *With indication of the faulty phase.*
(3) *With indication of the faulty phase, when used with phase-to-neutral voltage.*
(4) *With indication of the protection unit that has initiated the cycle (phase fault, earth fault, ...).*

Local indication

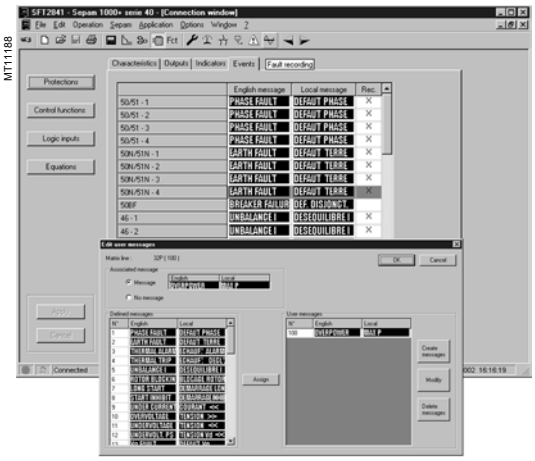

Personalized message editor.

Personalized user messages

30 additional messages may be created using the SFT2841 software to link a message to a logic input or the result of a logical equation, for example, or to replace a predefined message by a personalized message.

Personalized user message editor in SFT2841

The personalized message editor is integrated in the SOFT2841 software tool and may be accessed in connected or unconnected mode, from the control matrix screen:

■ display on the screen the "Event" tab associated with "Protection": the predefined messages associated with the protection functions appear

■ double-click on one of the messages displayed to activate the personalized message editor.

Personalized message editor functions

■ creation and modification of personalized messages:

□ in English and the local language

□ by text input or importing of an existing bitmap file (*.bmp) or by point to point drawing

■ deletion of personalized messages

■ assignment of predefined or personalized messages to an event defined in the control matrix:

□ from the control matrix screen, "Events" tab, double-click on the event to be linked to a new message

□ select the new predefined or personalized message, from among the messages presented

□ and "Assign" it to the event.

The same message may be assigned to several events, with no restriction.

Message display in SFT2841

■ the predefined messages are stored in Sepam's memory and appear:

□ written out in text format in connected mode

□ in code number format in unconnected mode

■ the personalized messages are saved with the other Sepam parameters and protection settings and are displayed written out in text format in connected and unconnected modes.

Message processing on the advanced UMI display

When an event occurs, the related message appears on the advanced UMI display.

The user presses the clear key to clear the message and be able to consult all the advanced UMI screens in the normal fashion.

The user must press the reset key to acknowledge latched events (e.g. protection outputs).

The list of messages remains accessible in the alarm history (⚠ key), in which the last 250 messages are stored.

To delete the messages stored in the alarm history:

■ display the alarm history on the advanced UMI

■ press the clear key.

Signal lamp type indication

The 9 yellow signal lamps on the front of Sepam are assigned by default to the following events:

Signal lamp	Event	Label on front panel
LED 1	Tripping of protection 50/51 unit 1	I>51
LED 2	Tripping of protection 50/51 unit 2	I>>51
LED 3	Tripping of protection 50N/51N unit 1	I0>51
LED 4	Tripping of protection 50N/51N unit 2	I0>>51
LED 5		Ext
LED 6		
LED 7	Circuit breaker open (I11) (1)	0 off
LED 8	Circuit breaker closed (I12) (1)	1 on
LED 9	Tripping by circuit breaker control	Trip

***(1)** Assignment by default with MES114.*

The default parameter setting may be personalized using the SFT2841 software:

■ the assignment of signal lamps to events is to be defined in the control matrix screen, "LEDs" tab

■ editing and printing of personalized labels are proposed in the "Sepam" menu.

Control matrix

The control matrix is used for simple assignment of the logic outputs and signal lamps to information produced by the protection units, program logic and logic inputs. Each column creates a logic OR between all the lines selected.
The matrix may also be used to display the alarms connected to the information. It guarantees the consistency of the parameter setting with the predefined functions.
The following data are managed in the control matrix and may be set using the SFT2841 software tool.

Data	Meaning	Comments
"Protection" button		
All of the application protection functions	Protection time-delayed output and additional outputs when applicable	Additional actions in the "Characteristic" tab: In service / out of service Protection latching Participation of the protection unit in circuit breaker tripping
"Logic input" button		
Logic inputs I11 to I14	According to configuration	If MES114 module is configured
Logic inputs I21 to I26	According to configuration	If MES114 is configured
"Control functions" button		
Tripping	Tripping by the circuit breaker control function	Forced on O1
Inhibit closing	Inhibition of closing by the circuit breaker control function	Forced on O2
Closing	Closing by the circuit breaker control function	Forced on O11 (requires an MES114)
Pick-up	Logical OR of the instantaneous output of all protection units	
Drop-out	A protection unit time delay counter has not yet gone back to 0.	
TCS fault	Trip circuit fault	
Remote control discrepancy	Discrepancy between the last state ordered by the remote monitoring and control system and the position of the circuit breaker	
CB control fault	A circuit breaker open or close order has not been executed	
Fault recording inhibition	Disturbance recording inhibited	
Sending of blocking information BI1	Sending of the blocking information to the following Sepam in logic discrimination chain 1	O3 by default
Sending of blocking information BI2	Sending of the blocking information to the next Sepam in logic discrimination chain 2	O12 by default On S42 only
Tripping by logic discrimination	Tripping order sent by the logic discrimination function	Only when the logic discrimination function is used without the circuit breaker control function
Cleared fault	The recloser function has sucessfully reclosed	Impulse type output
Final trip	The circuit breaker is definitively open after the reclosing cycles	Impulse type output
Recloser ready	The recloser is ready to carry out the cycles	
Recloser in service	The recloser is in service	
Recloser cycle 1	Cycle 1 in progress	
Recloser cycle 2	Cycle 2 in progress	
Recloser cycle 3	Cycle 3 in progress	
Recloser cycle 4	Cycle 4 in progress	
Reverse rotation	The voltages measured are rotating in reverse	
MET148-1 fault MET148-2 fault	Hardware problem on an MET module (module 1 or 2) or on an RTD	
Watchdog	Monitoring of Sepam operation	Always on O4 if used
"Equation" button		
V1 to V10	Logical equation editor outputs	

Logical equations

Application

This function may be used to configure simple logical functions by combining data received from the protection functions or logic inputs.
By using logical operators (AND, OR, XOR, NOT) and time delays, new processing operations and indications may be added to the existing ones.
The logical functions produce outputs that may be used:
- in the matrix to control relay outputs, light up LEDs or display new messages
- in the protection functions to create new inhibition or reset conditions, for example
- in circuit breaker control to add cases of circuit breaker tripping, closing or inhibition
- in disturbance recording to record particular logical data.

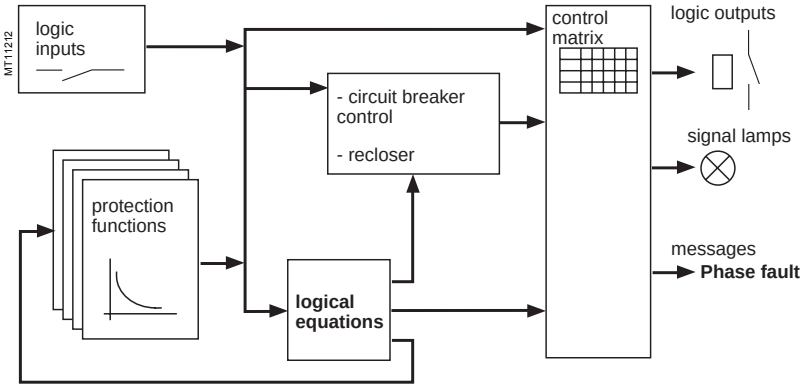

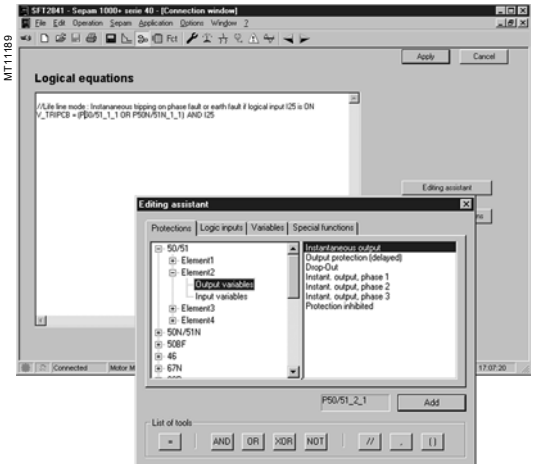

Logical equation editor.

Logical function configuration

Logical functions are entered in text format in the SFT2841 editor. Each line includes a logical operation, the result of which is assigned to a variable.
Example:
V1 = P5051_2_3 OR I12
The lines are executed sequentially every 14 ms.

Description of operations

Operators

- **NOT**: logical inversion
- **OR**: logical OR
- **AND**: logical AND
- **XOR**: exclusive OR. **V1 XOR V2** is equivalent to **(V1 AND (NOT V2)) OR (V2 AND (NOT V1))**
- **=**: assignment of a result
- ***//***: start of a comment, the characters on the right are not processed
- **(,)**: the operations may be grouped between brackets.

Functions

- x **= SR**(y, z): bistable with priority given to Set
  - x is set to 1 when y is equal to 1
  - x is set to 0 when z is equal to 1 (and y is equal to 0)
  - x is unchanged in the other cases.
- **LATCH**(x, y, ...): latching of variables x, y, ...

The variables are maintained constantly at 1 after having been set to 1 a first time. They are reset to 0 after Sepam is reset (reset button, external input or remote control order).
The LATCH function accepts as many parameters as the number of variables that the user wishes to latch.
It applies to the entire program, whatever the position in the program. For easier reading, it is advisable to put it at the start of the program.

Logical equations

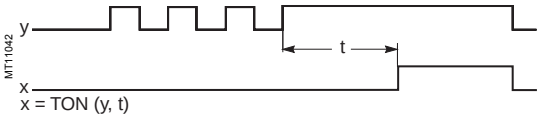

■ **x = TON**(y, t): on delay timer
The x variable follows the switching to 1 of the y variable with a delay t (t in ms).

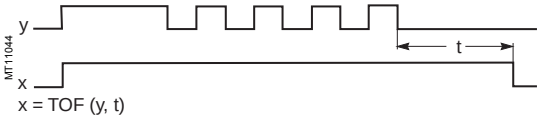

■ x **= TOF**(y, t): off delay timer
The x variable follows the switching to 0 of the y variable with a delay t (t in ms).

■ x **= PULSE**(d, i, n): time-tagger
Used to generate n periodic pulses, separated by a time interval i as of the starting time d
□ d is expressed as hour:minute:second
□ i is expressed as hour:minute:second
□ n is an integer (n = -1: repetition until the end of the day).
Example V1 = PULSE (8:30:00, 1:0:0,4) will generate 4 pulses at one-hour intervals at 8 h 30, 9 h 30, 10 h 30, 11 h 30. This will be repeated every 24 hours.
The pulses last for a 14 ms cycle. V1 has the value of 1 during the cycle.
If necessary, V1 may be extended using the **TOF, SR** or **LATCH** functions.

Input variables
They come from protection functions or logic inputs. They may only appear on the right of the assignment sign:
■ **I11** to **I14**, **I21** to **I26**: logic inputs
■ **P**protection_unit_data: a protection output.
Example: **P50/51_2_1**, overcurrent protection, unit 2, data 1: time-delayed output.
The data numbers are detailed in the table which follows.

Output variables
They are directed to the matrix, or to the protection functions, or to the program logic functions. They may only appear on the left of the assignment sign:
The output variables should only be used once; otherwise the last assignment is taken into account.
■ outputs to the matrix: **V1** to **V10**
The outputs are included in the matrix and may therefore control signal lamps, relay outputs or messages.
■ outputs to a protection input: **P**protection_unit_data
Example: **P59_1_113**, overvoltage protection, unit 1, data 113: protection inhibition.
The data numbers are detailed in the table which follows.
■ outputs to program logic:
□ **V_TRIPCB**: circuit breaker tripping by the circuit breaker control function. Used to complete circuit breaker tripping conditions and activate the recloser.
□ **V_CLOSECB**: circuit breaker closing by the circuit breaker control function. Used to generate a circuit breaker close order based on a particular condition.
□ **V_INHIBCLOSE**: inhibition of circuit breaker closing by the circuit breaker control function. Used to add circuit breaker closing inhibition conditions.
□ **V_FLAGREC**: data saved in disturbance recording. Used to save a specific logical status in addition to those already present in disturbance recording.

Local variables
Variables designed for intermediary calculations. They are not available outside the logical equation editor. They may appear on the left or right of the assignment sign.
There are 31 of them: **VL1** to **VL31.**
Two constants are also predefined: **K_1** always equal to 1 and **K_0** always equal to 0.

Logical equations

Details of protection inputs/outputs
The table below lists the input/output data available for each protection function. The SFT2841 software includes a data input assistance tool which may be used to quickly identify each data item:
■ numbers less than 100 correspond to the protection outputs that may be used as equation input variables
■ numbers between 100 and 199 correspond to the protection inputs that may be used as equation output variables
■ numbers greater than 200 correspond to the recloser outputs that may be used as equation input variables.

Table of protection function input and output variables

Designation	Bit	27/ 27S	27D	27R	32P	32Q	37	38/ 49T	46	47	48/ 51 LR	49 RMS	50/ 51	50 BF	50N 51N	51V	59	59N	66	67	67N	79	81H	81L	CT	VT
Outputs																										
Instantaneous output (Pick-up)	1	■	■	■	■	■	■		■	■			■	■	■	■	■	■		■	■		■	■		
Protection output (time-delayed)	3	■	■	■	■	■	■	■	■	■	■	■	■	■	■	■	■	■	■	■	■		■	■	■	■
Drop-out	4												■		■	■				■	■					
Instantaneous output inverse zone	6																			■	■					
Phase 1 fault	7	■ (1)											■			■	■ (1)			■					■	
Phase 2 fault	8	■ (1)											■			■	■ (1)			■					■	
Phase 3 fault	9	■ (1)											■			■	■ (1)			■					■	
Alarm	10							■				■														
Inhibit closing	11											■														
RTD fault	12							■																		
Locked rotor	13										■															
Excessive starting time	14										■															
Locked rotor at start-up	15										■															
Protection inhibited	16	■	■	■	■	■	■	■	■	■	■	■	■	■	■	■	■	■	■	■	■		■	■	■	■
Hot state	18											■														
Positive active power	19				■																					
Negative active power	20				■																					
Instantaneous output at 0.8 Is	21																			■						
Starting in progress	22										■									■						
Recloser in service	201																					■				
Recloser ready	202																					■				
Cleared fault	203																					■				
Final trip	204																					■				
Reclosing cycle 1	211																					■				
Reclosing cycle 2	212																					■				
Reclosing cycle 3	213																					■				
Reclosing cycle 4	214																					■				
Inputs																										
Reset	101	■	■	■	■	■	■	■	■	■	■	■	■	■	■	■	■	■	■	■	■	■	■	■		
VT fault	103																									■
Start 50BF	107													■												
Inhibition	113	■	■	■	■	■	■	■	■	■	■	■	■	■	■	■	■	■	■	■	■	■	■	■	■	■

***(1)** When the protection function is used for phase-to-neutral voltage.*

Processing upon loss of auxiliary voltage
The **V1** to **V10, VL1** to **VL 31** and **V_TRIPCB, V_CLOSECB, V_INHIBCLOSE, V_FLAGREC** variables are saved in the event of a Sepam auxiliary power outage. The status is restored when the power returns, allowing the statuses produced by **LATCH**, **SR** or **PULSE** type memory operators to be saved.

Special cases
■ brackets must be used in expressions which comprise different **OR, AND, XOR or NOT** operators:
□ **V1 = VL1 AND I12 OR P27/27S_1_1. //** incorrect expression
□ **V1 = (VL1 AND I12) OR P27/27S_1_1. //** correct expression
□ **V1 = VL1 OR I12 OR P27/27S_1_1. //** correct expression
■ only the **V1 to V10, VL1 to VL31 and V_TRIPCB, V_CLOSECB, V_INHIBCLOSE, V_FLAGREC** variables are allowed in the **LATCH** function
■ function parameters cannot be expressions:
□ **VL3 = TON ((V1 AND V3), 300) //** incorrect expression
□ **VL4 = V1 AND V3**
□ **VL3 = TON (VL4, 300) //** correct.

Use limit
The number of operators and functions (**OR, AND, XOR, NOT, =, TON, TOF, SR, PULSE**) is limited to 100.

Examples of applications

■ latching of recloser final trip data
By default, this data is of the impulse type at the recloser output. If required by operating conditions, it may be latched as follows:
LATCH (V1) // V1 may be latched
V1 = P79_1_204 // recloser "final trip" output.
V1 may then control a signal lamp or relay output in the matrix.
■ latching of a signal lamp without latching the protection function
Certain operating conditions call for the latching of indications on the front panel of Sepam, without latching of the trip output O1.
LATCH (V1, V2)
V1 = P50/51_1_1 OR P50/51_3_1 // tripping, units 1 and 3 of protection 50/51
V2 = P50/51_2_1 OR P50/51_4_1 // tripping, units 2 and 4 of protection 50/51
V1 and V2 must be configured in the matrix to control 2 front panel signal lamps.
■ circuit breaker tripping if input I13 is present for more than 300 ms.
V_TRIPCB = TON (I13, 300).
■ life line mode (example 1)
If work is underway with the power on (indicated by input I25), and the user wishes to change the relay behavior as follows:
1 - circuit breaker tripping by the instantaneous outputs of protection functions 50/51, unit 1 or 50N/51N, unit 1 AND if input I25 is present:
2 - Recloser inhibition:
P79_1_113 = I25
■ life line mode (example 2)
The user wishes to inhibit protection functions 50N/51N and 46 by an input I24:
P50N/51N_1_113 = I24
P46_1_113 = I24
■ validation of a 50N/51N protection function by logic input I21
An 50N/51N protection function set with a very low set point must only trigger tripping of the circuit breaker if it is validated by an input. The input comes from a relay which accurately measures the current in the neutral point:
V_TRIPCB = P50N/51N_1_3 AND I21
■ inhibition of circuit breaker closing if thermal alarm set points are overrun
The temperature protection function 38/49T supplies 16 alarm bits. If one of the first three bits is activated the user wishes to inhibit circuit breaker closing:
V_INHIBCLOSE = P38/49T_1_10 OR P38/49T_2_10 OR P38/49T_3_10.

Contents

Presentation

General

Modbus communication enables Sepam to be connected to a remote monitoring and control system equipped with a master Modbus communication channel and a physical link of the RS 485 type, optical fibre or another interface equipped with an appropriate converter.
The Modbus protocol used by Sepam is a compatible sub-group of the RTU Modbus (1) protocol (a Modbus master can communicate with several Sepam units). Sepam is always a slave station.
All the Sepam units can be equipped with the ACE949-2 (2-wire) or ACE959 (4-wire) interface for connection to a communication network, RS485 (2) and ACE937 interface for connection to a communication network, fiber optics in star arrangement.

Data available

The data available depend on the type of Sepam.

Measurement readout
- phase and earth fault currents
- peak demand phase currents
- tripping currents
- cumulative breaking current
- phase-to-phase, phase-to-neutral and residual voltages
- active, reactive and apparent power
- active and reactive energy
- frequency
- temperatures
- thermal capacity used
- starts per hour and inhibit time
- running hours counter
- motor starting current and time
- operating time before overload tripping
- waiting time after tripping
- operating time and number of operations
- circuit breaker charging time.

Program logic data readout
- a table of 144 pre-assigned remote indications (TS) (depends on the type of Sepam) enables the readout of program logic data status
- readout of the status of 10 logic inputs.

Remote control orders
Writing of 16 impulse-type remote control orders (TC) in either direct mode or SBO (Select Before Operate) mode via 16 selection bits.

Other functions
- reading of Sepam configuration and identification
- time-tagging of events (synchronization via the network or externally via logic input I21), time-tagging within a ms
- remote reading of Sepam settings
- remote setting of protection units
- remote control of the analog output (3)
- transfer of disturbance recording data.

(1) Modbus is a Modicon registered trademark.
(2) Refer to document PCRED399074EN "RS 485 network connection guide" regarding network implementation.
(3) With MSA141 option.

Modbus protocol

Characterization of exchanges

The Modbus protocol may be used to read or write one or more bits, one or more words, the contents of the event counters or the contents of the diagnosis counters.

Modbus functions supported

Sepam Modbus protocol supports 11 functions:
- function 1: reading of n output or internal bits
- function 2: reading of n input bits
- function 3: reading of n output or internal words
- function 4: reading of n input words
- function 5: writing of 1 bit
- function 6: writing of 1 word
- function 7: high-speed reading of 8 bits
- function 8: reading of diagnosis counters
- function 11: reading of Modbus event counters
- function 15: writing of n bits
- function 16: writing of n words.

The following exception codes are supported:
- 1: unknown function code
- 2: incorrect address
- 3: incorrect data
- 7: not acknowledged (remote reading and setting).

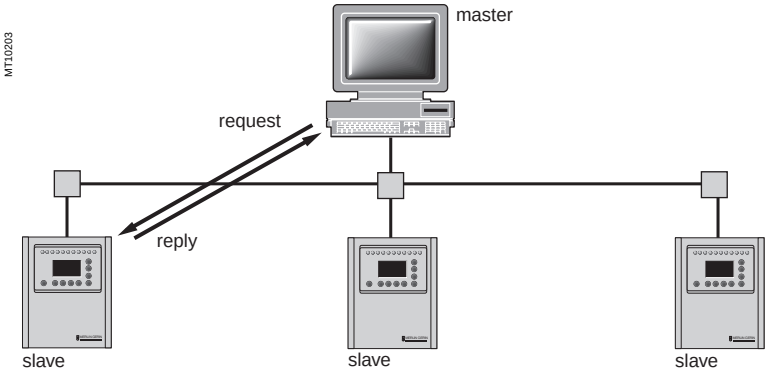

Exchanges are initiated by the master and include a request by the master and a reply by the slave (Sepam). Requests by the master are either addressed to a given Sepam identified by its number in the first byte of the request frame, or addressed to all the Sepam (broadcasting).

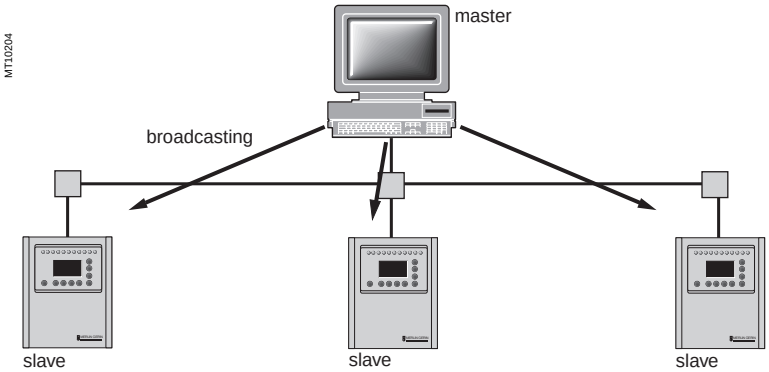

Broadcast commands are necessarily write commands.
No replies are transmitted by the Sepam.

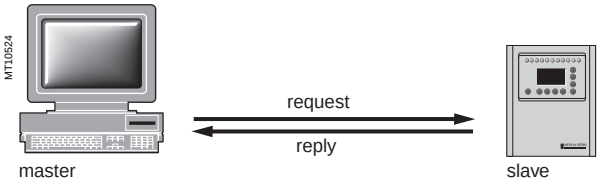

It is not necessary to have a detailed knowledge of the protocol unless the master is a central computer which requires the corresponding programming. All Modbus exchanges include 2 messages: a request by the master and a reply by the Sepam.

All the frames that are exchanged have the same structure. Each message or frame contains 4 types of data:

slave number	function code	data zones	CRC 16 check zone

- slave number (1 byte): this indicates the receiving Sepam (0 to FFh).
If it is equal to zero, the request concerns all the slaves (broadcasting) and there is no reply message
- function code (1 byte): this is used to select a command (read, write, bit, word) and to check that the reply is correct
- data zones (n bytes): these zones contain the parameters relating to the function: bit, address, word address, bit value, word value, number of bits, number of words
- check zone (2 bytes): this zone is used to detect transmission errors.

Synchronization of exchanges

Any character that is received after a silence of more than 3 characters is considered as the beginning of a frame. A silence of at least 3 characters must be left on the line between two frames.
Example: at 9600 bauds, this time is equal to approximately 3 milliseconds.

Communication interface characteristics

Type of transmission	Asynchronous serial
Protocol	Modbus slave (Jbus profile)
Rate	4800, 9600, 19200, 38400 bauds.
Data format	1 start, 8 bits, no parity, 1 stop 1 start, 8 bits, even parity, 1 stop 1 start, 8 bits, odd parity, 1 stop
Response time	Less than 15 ms
Maximum number of Sepams on a Modbus network	25
RS 485 electrical interface	ACE949-2, compliant with EIA standard 2-wire differential RS 485 ACE959, compliant with EIA standard 4-wire differential RS 485
Electrical interface power supply	External, by auxiliary supply 12 V DC or 24 V DC
Type of connection	Screw-type terminals and clamps for recovery of shielding
Maximum length of RS 485 network (lengths multiplied by 3 with FILECA cable, with a maximum of 1300 m)	With interfaces with 12 V DC distributed supply 320 m with 5 Sepam 180 m with 10 Sepam 160 m with 20 Sepam 125 m with 25 Sepam With interfaces with 24 V DC distributed supply 1000 m with 5 Sepam 750 m with 10 Sepam 450 m with 20 Sepam 375 m with 25 Sepam

For further details, refer to "Sepam-RS 485 network connection guide" PCRED399074EN.
Fiber optics interface, refer to the chapter "connection of ACE937 interfaces" page 6/26.

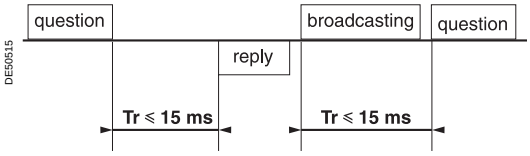

Response time

The communication coupler **response time (Tr)** is less than 15 ms, including a 3-character silence (approximately 3 ms at 9600 bauds).
This time is given with the following parameters:
- 9600 bauds
- format: 8 bits, odd parity, 1 stop bit.

Setting the communication parameters

Before a Sepam equipped with the Modbus communication system is put into service, 4 parameters need to be set. Those parameters are saved in the event of a power outage.

Communication parameters	Factory setting
Transmission rate, adjustable from 4800 to 38400 bauds	9600 bauds
Slave number assigned to Sepam adjustable from 1 to 255	N° 001
Parity: even parity, odd parity, no parity	Even parity
Direct / confirmed remote control mode	Direct

The Modbus slave number should be assigned before Sepam is connected to the communication network (all Sepams have a slave number that is factory-set to 1).
Set the communication parameters before connecting Sepam to the communication network.
The communication parameters may be changed while Sepam is operating without disturbing operation. Sepam ignores the first frame received after it is energized or after the communication parameters are changed via SFT2841.

"Activity on the line" indicator:
The green indicator on the ACE949-2 or ACE959 accessory is activated by variations of the electrical signal on the RS 485 network (optical signals for the ACE937). When the master communicates with Sepam (sending or receiving), the green indicator flashes.

Testing the link

- after wiring, check the indications given by the green "activity on the line" indicator
- carry out read and write cycles using the test zone and the Modbus echo mode
- use the SFT2819 software to read and write the test zone.

Test zone	
Read	
Send	01 03 0C00 0002 (C75B) crc,
Receive	01 03 04 0000 0000 (FA33) crc.
Write	
Send	01 10 0C00 0001 02 1234 (6727) crc,
Receive	01 10 0C00 0001 (0299) crc.
Read	
Send	01 03 0C00 0001 (875A) crc,
Receive	01 03 02 1234 (B533) crc.
Modbus echo mode (see Modbus protocol function 8)	
Send	01 08 0000 1234 (ED7C) crc,
Receive	01 08 0000 1234 (ED7C) crc.

The Modbus frames opposite, sent by or received by a remote monitoring and control system, are data used for test purposes when the communication link is first implemented.
The CRC received by Sepam is recalculated, making it possible to test the calculation of the CRC sent by the master:
- if the CRC received is correct, Sepam replies
- if the CRC received is incorrect, Sepam does not reply.

Diagnosis counters

The diagnosis counters managed by Sepam are:
- **CPT1**, first word: number of correct frames received, whether or not the slave is concerned
- **CPT2**, second word: number of frames received with CRC error, or frames received with more than 255 bytes and not interpreted, or frames received with at least one character that has a parity error, “overrun”, “framing”, “break” on the line. An incorrect rate causes incrementation of CPT2
- **CPT3**, third word: number of exception replies generated (even if not sent, as a result of a broadcast request)
- **CPT4**, fourth word: number of frames specifically addressed to the station (excluding broadcasting)
- **CPT5**, fifth word: number of broadcast frames received with no errors
- **CPT6**, sixth word: not significant
- **CPT7**, seventh word: number of “Sepam not ready” replies generated
- **CPT8**, eighth word: number of frames received with at least one character that has a parity error, “overrun”, “framing”, “break” on the line
- **CPT9**, ninth word: number of correct requests received and correctly executed.

The CPT2 and CPT9 counters may be viewed with SFT2841 (“Sepam diagnosis” screen).
The counters may be accessed via the dedicated reading function (Modbus protocol function 11).
When the value of a counter is equal to FFFFh (65535), it automatically switches to 0000h (0). After an **auxiliary supply outage** the diagnosis counters are initialized to zero.

Malfunctions

- it is advisable to connect the Sepam to the RS 485 network one by one
- the display of the CPT2 and CPT9 diagnosis counters with SFT2841 ("Sepam diagnosis" screen) makes it possible to check Modbus exchanges
- check the slave number, rate and format using SFT2841 or the Sepam UMI.

Make sure that the master is sending frames to the Sepam concerned by checking the activity on the RS 232 - RS 485 converter, if there is one, and on the ACE949-2 or ACE959 module.
- check the wiring on each ACE949-2 or ACE959 module
- check the tightening of the screw-type terminals on each module
- check the connection of the CCA612 cord linking the ACE949-2 or ACE959 module to the Sepam unit (marked ©)
- check that polarization is only at one point and that impedance matching is at the ends of the RS 485 network
- check that the cable being used is the recommended one
- check that the ACE909-2 or ACE919 converter is connected and set up correctly.

Data addresses and encoding

Presentation

Data which are similar from the monitoring and control application viewpoint are grouped together in adjacent address zones:

	Hexadecimal starting address	Ending address	Modbus functions enabled
Synchronization zone	0002	0005	3, 16
Identification zone	0006	000F	3
Event table 1			
Exchange word	0040	0040	3, 6, 16
Events (1 to 4)	0041	0060	3
Event table 2			
Exchange word	0070	0070	3, 6, 16
Events (1 to 4)	0071	0090	3
Data			
Remote control orders	00F0	00F0	3, 4, 6, 16 1, 2, 5, 15*
Remote control confirmation	00F1	00F1	3, 4, 6, 16 1, 2, 5, 15*
Status	0100	0112	3, 4 1, 2*
Measurements	0113	0158	3, 4
Diagnosis	0159	0185	3, 4
Tripping context	0250	0275	3, 4
Switchgear diagnosis	0290	02A5	3, 4
Application	02CC	02FE	3
Test zone	0C00	0C0F	3, 4, 6, 16 1, 2, 5, 15
Protection settings			
Read zone 1	1E00	1E7C	3
Read request zone 1	1E80	1E80	3, 6, 16
Remote settings zone 1	1F00	1F7C	3, 6
Read zone 2	2000	207C	3
Read request zone 2	2080	2080	3, 6, 16
Remote settings zone 2	2100	217C	3, 16
Disturbance recording			
Choice of transfer function	2200	2203	3, 16
Identification zone	2204	2271	3
Disturb. rec. exchange word	2300	2300	3, 6, 16
Disturbance recording data	2301	237C	3

N.B. Non-addressable zones may reply by an exception message or else supply non-significant data.
(*) these zones may be accessed in word mode or bit mode.
The address of bit i ($0 \leqslant i \leqslant F$) of address word J is then (J x 16) + i.
Example: 0C00 bit 0 = C000 0C00 bit 7 = C007.

Synchronization zone

The synchronization zone is a table which contains the absolute date and time for the time-tagging function. Time messages should be written in a single block containing 4 words, using function 16: write word.
Messages can be read word by word or by groups of words using function 3.

Synchronization zone	Word address	Access	Modbus function enabled
Binary time (year)	0002	Read/write	3, 16
Binary time (months + days)	0003	Read	3
Binary time (hours + minutes)	0004	Read	3
Binary time (milliseconds)	0005	Read	3

See "time-tagging of events" chapter for data format.

Identification zone

The identification zone contains system-type information pertaining to the identification of the Sepam equipment.
Some of the information in the identification zone is also found in the configuration zone at the address 02CCh.

Identification zone	Word address	Access	Modbus function enabled	Format	Value
Manufacturer identification	0006	R	3		0100
Equipment identification	0007	R	3		0
Marking + equipment type	0008	R	3		Idem 02E2
Communication version	0009	R	3	Not managed	0
Application version	000A/B	R	3	(1)	
Sepam check-word	000C	R	3		Idem 0100
Extension word	000D	R	3	Not managed	0
Command	000E	R/W	3/16	Not managed	Init. to 0
Extension zone address	000F	R	3		02CC

(1) *MSB word 2: major index*
LSB word 2: minor index.

Events 1 zone

The event zone is a table which contains a maximum of 4 time-tagged events. Events should be read in a single block containing 33 words using function 3.
The exchange word can be written using functions 6 or 16, and read individually using function 3.

Events 1 zone	Word address	Access	Modbus function enabled
Exchange word	0040	Read/write	3, 6, 16
Event n°1	0041-0048	Read	3
Event n°2	0049-0050	Read	3
Event n°3	0051-0058	Read	3
Event n°4	0059-0060	Read	3

See "time-tagging of events" chapter for data format.

Events 2 zone

The event zone is a table which contains a maximum of 4 time-tagged events.
Events should be read in a single block containing 33 words using function 3.
The exchange word can be written using functions 6 or 16 and read individually using function 3.

Events 2 zone	Word address	Access	Modbus function enabled
Exchange word	0070	Read/write	3, 6, 16
Event n°1	0071-0078	Read	3
Event n°2	0079-0080	Read	3
Event n°3	0081-0088	Read	3
Event n°4	0089-0090	Read	3

See "time-tagging of events" chapter for data format.

Remote control zone

The remote control zone is a table which contains the pre-assigned remote control bits (TC). The zone may be read or written using the word functions or bit functions. (see "remote control orders" chapter).

Remote control orders	Word address	Bit address	Access	Function	Format
TC1-TC16	00F0	0F00	R/W	3/4/6/16 1/2/5/15	B
STC1-STC16	00F1	0F10	R/W	3/4/6/16 1/2/5/15	B

Status zone

The **status zone** is a table which contains the Sepam check-word, pre-assigned remote annunciation bits (TS), logic inputs, logic outputs, LEDs and analog output.

Status	Word address	Bit address	Access	Modbus function enabled	Format
Sepam check-word	100	1000	R	3/4 or 1, 2, 7	X
TS1-TS16	101	1010	R	3/4 or 1, 2	B
TS17-TS32	102	1020	R	3/4 or 1, 2	B
TS33-TS48	103	1030	R	3/4 or 1, 2	B
TS49-TS64 (reserved)	104	1040	R	3/4 or 1, 2	B
TS65-TS80	105	1050	R	3/4 or 1, 2	B
TS81-TS96	106	1060	R	3/4 or 1, 2	B
TS97-TS112	107	1070	R	3/4 or 1, 2	B
TS113-TS128	108	1080	R	3/4 or 1, 2	B
TS129-TS144	109	1090	R	3/4 or 1, 2	B
Reserved	10A	10A0	R	_	_
Logic inputs	10B	10B0	R	3/4 or 1, 2	B
Logical equation	10C	10C0	R	_	_
Logic outputs	10D	10D0	R	3/4 or 1, 2	B
LEDs	10E	10E0	R	3/4 or 1, 2	B
Analog output	10F	10F0	R/W	3, 6, 16	16S

Measurement zone

Measurements	Word address	Access	Modbus function enabled	Format	Unit
Phase current I1 (x 1)	0113	R	3, 4	16NS	0.1 A
Phase current I2 (x 1)	0114	R	3, 4	16NS	0.1 A
Phase current I3 (x 1)	0115	R	3, 4	16NS	0.1 A
Residual current I0 Sum (x 1)	0116	R	3, 4	16NS	0.1 A
Residual current measured (x 1)	0117	R	3, 4	16NS	0.1 A
Average phase current Im1 (x 1)	0118	R	3, 4	16NS	0.1 A
Average phase current Im2 (x 1)	0119	R	3, 4	16NS	0.1 A
Average phase current Im3 (x 1)	011A	R	3, 4	16NS	0.1 A
Peak demand phase current IM1 (x 1)	011B	R	3, 4	16NS	0.1 A
Peak demand phase current IM2 (x 1)	011C	R	3, 4	16NS	0.1 A
Peak demand phase current IM3 (x 1)	011D	R	3, 4	16NS	0.1 A
Phase-to-phase voltage U21 (x 1)	011E	R	3, 4	16NS	1 V
Phase-to-phase voltage U32 (x 1)	011F	R	3, 4	16NS	1 V
Phase-to-phase voltage U13 (x 1)	0120	R	3, 4	16NS	1 V
Phase-to-neutral voltage V1 (x 1)	0121	R	3, 4	16NS	1 V
Phase-to-neutral voltage V2 (x 1)	0122	R	3, 4	16NS	1 V
Phase-to-neutral voltage V3 (x 1)	0123	R	3, 4	16NS	1 V
Residual voltage V0 (x 1)	0124	R	3, 4	16NS	1 V
Positive sequence voltage Vd (x 1)	0125	R	3, 4	16NS	1 V
Negative sequence voltage Vi (x 1)	0126	R	3, 4	16NS	1 V
Frequency	0127	R	3, 4	16NS	0.01 Hz
Active power P (x 1)	0128	R	3, 4	16S	1 kW
Reactive power Q (x 1)	0129	R	3, 4	16S	1 kvar
Apparent power S (x 1)	012A	R	3, 4	16S	1 kVA
Peak demand active power Pm (x 1)	012B	R	3, 4	16S	1 kW
Peak demand reactive power Qm (x 1)	012C	R	3, 4	16S	1 kvar
Power factor cos φ (x 100)	012D	R	3, 4	16S	0.01

Measurement zone (cont'd)

Measurements	Word address	Access	Modbus function enabled	Format	Unit
Positive active energy Ea+ (x 1)	012E/012F	R	3, 4	2 x 16NS	100 kW.h
Negative active energy Ea- (x 1)	0130/0131	R	3, 4	2 x 16NS	100 kW.h
Positive reactive energy Er+ (x 1)	0132/0133	R	3, 4	2 x 16NS	100 kvar.h
Negative reactive energy Er- (x 1)	0134/0135	R	3, 4	2 x 16NS	100 kvar.h
Phase current I1 (x 10)	0136	R	3, 4	16NS	1 A
Phase current I2 (x 10)	0137	R	3, 4	16NS	1 A
Phase current I3 (x 10)	0138	R	3, 4	16NS	1 A
Residual current I0 Sum (x 10)	0139	R	3, 4	16NS	1 A
Residual current measured (x 10)	013A	R	3, 4	16NS	1 A
Average phase current Im1 (x 10)	013B	R	3, 4	16NS	1 A
Average phase current Im2 (x 10)	013C	R	3, 4	16NS	1 A
Average phase current Im3 (x 10)	013D	R	3, 4	16NS	1 A
Peak demand phase current IM1 (x 10)	013E	R	3, 4	16NS	1 A
Peak demand phase current IM2 (x 10)	013F	R	3, 4	16NS	1 A
Peak demand phase current IM3 (x 10)	0140	R	3, 4	16NS	1 A
Phase-to-phase voltage U21 (x 10)	0141	R	3, 4	16NS	10 V
Phase-to-phase voltage U32 (x 10)	0142	R	3, 4	16NS	10 V
Phase-to-phase voltage U13 (x 10)	0143	R	3, 4	16NS	10 V
Phase-to-neutral voltage V1 (x 10)	0144	R	3, 4	16NS	10 V
Phase-to-neutral voltage V2 (x 10)	0145	R	3, 4	16NS	10 V
Phase-to-neutral voltage V3 (x 10)	0146	R	3, 4	16NS	10 V
Residual voltage V0 (x 10)	0147	R	3, 4	16NS	10 V
Positive sequence voltage Vd (x 10)	0148	R	3, 4	16NS	10 V
Negative sequence voltage Vi (x 10)	0149	R	3, 4	16NS	10 V
Frequency	014A	R	3, 4	16NS	0.01 Hz
Active power P (x 100)	014B	R	3, 4	16S	100 kW
Reactive power Q (x 100)	014C	R	3, 4	16S	100 kvar
Apparent power S (x 100)	014D	R	3, 4	16S	100 kVA
Peak demand active power Pm (x 100)	014E	R	3, 4	16S	100 kW
Peak demand reactive power Qm (x 100)	014F	R	3, 4	16S	100 kvar
Power factor cos φ (x 100)	0150	R	3, 4	16S	0.01
Positive active energy Ea+ (x 1)	0151/0152	R	3, 4	32NS	100 kW.h
Energie active négative Ea- (x 1)	0153/0154	R	3, 4	32NS	100 kW.h
Positive reactive energy Er+ (x 1)	0155/0156	R	3, 4	32NS	100 kvar.h
Negative reactive energy Er- (x 1)	0157/0158	R	3, 4	32NS	100 kvar.h

Diagnosis

Diagnosis	Word address	Access	Modbus function enabled	Format	Unit
Reserved	0159	-	-	-	-
Last tripping current Itrip1	015A	R	3, 4	16NS	10 A
Last tripping current Itrip2	015B	R	3, 4	16NS	10 A
Last tripping current Itrip3	015C	R	3, 4	16NS	10 A
Last tripping current Itrip0	015D	R	3, 4	16NS	1 A
Cumulative breaking current	015E	R	3, 4	16NS	$1(kA)^2$
Number of operations	015F	R	3, 4	16NS	1
Operating time	0160	R	3, 4	16NS	1 ms
Charging time	0161	R	3, 4	16NS	0.1 s
Running hours counter / operation time	0162	R	3, 4	16NS	1 h
Reserved	0163	-	-	-	-
Thermal capacity used	0164	R	3, 4	16NS	%
Time before tripping	0165	R	3, 4	16NS	1 min
Time before closing	0166	R	3, 4	16NS	1 min
Negative sequence / unbalance	0167	R	3, 4	16NS	% lb
Starting time / overload	0168	R	3, 4	16NS	0.1 s
Starting current / overload	0169	R	3, 4	16NS	1 A
Start inhibit time delay	016A	R	3, 4	16NS	1 min
Number of starts allowed	016B	R	3, 4	16NS	1

Diagnosis (cont'd)

Diagnosis	Word address	Access	Modbus function enabled	Format	Unit
Temperatures 1 to 16	016C/017B	R	3, 4	16S	1 °C
External positive active energy Ea+ ext	017C/017D	R	3, 4	32NS	100 kW.h
External negative active energy Ea- ext	017E/017F	R	3, 4	32NS	100 kW.h
External positive reactive energy Er+ ext	0180/0181	R	3, 4	32NS	100 kvar.h
External negative reactive energy Er- ext	0182/0183	R	3, 4	32NS	100 kvar.h
Learnt cooling time constant T2 (49 RMS) thermal rate 1	0184	R	3, 4	16NS	mn
Learnt cooling time constant T2 (49 RMS) thermal rate 2	0185	R	3, 4	16NS	mn

Tripping context zone

Latest tripping context	Word address Modbus	Access	Modbus function enabled	Format	Unit
Time-tagging of the context (see "time-tagging of events" chapter)	0250/0253	R	3	IEC	-
Tripping current Itrip1	0254	R	3, 4	32NS	0.1 A
Tripping current Itrip2	0256	R	3, 4	32NS	0.1 A
Tripping current Itrip3	0258	R	3, 4	32NS	0.1 A
Residual current I0 Sum	025A	R	3, 4	32NS	0.1 A
Residual current I0 measured	025C	R	3, 4	32NS	0.1 A
Phase-to-phase voltage U21	025E	R	3, 4	32NS	1 V
Phase-to-phase voltage U32	0260	R	3, 4	32NS	1 V
Phase-to-phase voltage U13	0262	R	3, 4	32NS	1 V
Phase-to-neutral voltage V1	0264	R	3, 4	32NS	1 V
Phase-to-neutral voltage V2	0266	R	3, 4	32NS	1 V
Phase-to-neutral voltage V3	0268	R	3, 4	32NS	1 V
Residual voltage V0	026A	R	3, 4	32NS	1 V
Positive sequence voltage Vd	026C	R	3, 4	32NS	1 V
Negative sequence voltage Vi	026E	R	3, 4	32NS	1 V
Frequency	0270	R	3, 4	32NS	0.01 Hz
Active power P	0272	R	3, 4	32S	1 kW
Reactive power Q	0274	R	3, 4	32S	1 kvar

Switchgear diagnosis zone

Switchgear diagnosis	Word address	Access	Modbus function enabled	Format	Unit
Initial value of cumulative breaking current	0290	R	3, 4	32NS	1 kA^2
Cumulative breaking current (0 < I < 2 In)	0292	R	3, 4	32NS	1 kA^2
Cumulative breaking current (2 In < I < 5 In)	0294	R	3, 4	32NS	1 kA^2
Cumulative breaking current (5 In < I < 10 In)	0296	R	3, 4	32NS	1 kA^2
Cumulative breaking current (10 In < I < 40 In)	0298	R	3, 4	32NS	1 kA^2
Cumulative breaking current (I > 40 In)	029A	R	3, 4	32NS	1 kA^2
Cumulative breaking current	029C	R	3, 4	32NS	1 kA^2
Number of trips	029E	R	3, 4	32NS	1
Number of operations (If MES114)	02A0	R	3, 4	32NS	1
Operating time (With MES114)	02A2	R	3, 4	32NS	1 ms
Charging time (With MES114)	02A4	R	3, 4	32NS	1 ms

Configuration and application zone

Configuration and application	Word address	Access	Modbus function enabled	Format	Unit
Type of application (1)	02CC	R	3	-	-
Name of application (S40, S41, T42…)	02CD/02D2	R	3	ASCII 12c	-
Sepam marking	02D3/02DC	R	3	ASCII 20c	-
Sepam application version	02DD/02DF	R	3	ASCII 6c	-
Modbus address (slave number) for Level 2	02E0	R	3	-	-
Modbus address (slave number) for RHM	02E1	R	3	-	-
Marking + type of equipment (3)	02E2	R	3	-	-
Type of coupler (0 = Modbus)	02E3	R	3	-	-
Communication version	02E4	R	3	NG	-
MET148-2 n° 1 module version	02E5/02E7	R	3	ASCII 6c	-
MET148-2 n° 2 module version	02E8/02EA	R	3	ASCII 6c	-
MSA141 module version	02EB/02ED	R	3	ASCII 6c	-
DSM303 module version	02EE/02F0	R	3	ASCII 6c	-
Name of language	02F1/02FA	R	3	ASCII 20c	-
Customized languaged version number (2)	02FB	R	3	-	-
English language version number (2)	02FC	R	3	-	-
Boot version number (2)	02FD	R	3	-	-
Extension word (4)	02FE	R	3	-	-

(1) *40: not configured*
41: S40
42: S41
43: S42
44: T40
45: T42
46: M41
47: G40.
(2) *MSB: major index, LSB: minor index.*
(3) *2E2 word: MSB: 10 h (Sepam)*
LSB: hardware configuration.

Bit	7	6	5	4	3	2	1	0
Option	**MD/MX**	**Extension**	**MET148-2/2**	**DSM303**	**MSA141**	**MET148-2/1**	**MES114**	**MES108**
Mod.MX	0	z	x	x	x	x	y	y
Mod.MD	1	z	x	0	x	x	y	y

x = 1 if option included
y = 1 if option included, exclusive options
z = 1 if extension in 2FE word (4).

(4) *Bit 0: = 1 if MES114E or MES114F Vac set up.*

Accuracy

Measurement accuracy depends on the weight of the unit; it is equal to the value of the point divided by 2.

Examples:		
I1	Unit = 1 A	Accuracy = 1/2 = 0.5 A
U21	Unit = 10 V	Accuracy = 10/2 = 5 V

Test zone

The test zone is a 16-word zone that may be accessed via the communication link by all functions, in both read and write modes, to facilitate communication testing at the time of commissioning or to test the link.

Test zone	Word address	Bit address	Access	Modbus function enabled	Format	
Test	0C00	C000-C00F	Read/write	1, 2, 3, 4, 5, 6, 15, 16	None	Initialized to 0
	0C0F	C0F0-C0FF	Read/write	1, 2, 3, 4, 5, 6, 15, 16	None	Initialized to 0

Protection setting zone

The protection setting zone is an exchange table which is used to read and set the protection functions. 2 setting zones are available to be used by 2 masters.

Protection setting	Word address zone 1	Word address zone 2	Access	Modbus function enabled
Setting read buffer	1E00/1E7C	2000/207C	R	3
Setting read request	1E80	2080	R/W	3/6/16
Remote setting request buffer	1F00/1F7C	2100/217C	R/W	3/16

See "Protection settings" chapter.

Fault recorder zone

The fault recorder zone is an exchange table which is used to read disturbance recording records. 2 zones are available to be used by 2 masters.

Disturbance recording	Word address zone 1	Word address zone 2	Access	Modbus function enabled
Choice of transfer function	2200/2203	2400/2403	R/W	3/16
Identification zone	2204/2228	2404/2428	R	3
Disturb. rec. exchange zone	2300	2500	R/W	3/6/16
Disturbance recording data	2301/237C	2501/257C	R	3

See "Disturbance recording" chapter.

Data encoding

For all formats

If a measurement overruns the maximum permissible value for the related format, the value read for the measurement will be the maximum permissible value for the format.

16 NS format

The information is encoded in a 16-bit word, in binary format, absolute value (unsigned). The 0 bit (b0) is the least significant bit in the word.

16 S format signed measurements (temperatures,...)

The information is encoded in a 16-bit word as a complement of 2.
Example:
- 0001 represents +1
- FFFF represents -1.

32 NS format

The information is encoded in two 16-bit words, in binary format, unsigned. The first word is the most significant word.

32 S format

The information is encoded as a complement of 2 in 2 words. The first word is the most significant word:
- 0000, 0001 represents +1
- FFFF, FFFF represents -1.

B format: Ix

Rank i bit in the word, with i between 0 and F.

Examples		F	E	D	C	B	A	9	8	7	6	5	4	3	2	1	0
Logic input	Word address 010B																
								26	25	24	23	22	21	14	13	12	11
	Bit address 10BX																
TS 1 to 16	Address 0101																
		16	15	14	13	12	11	10	9	8	7	6	5	4	3	2	1
	Bit address 101x																
TS 49 to 64	Word address 0104																
		64	63	62	61	60	59	58	57	56	55	54	53	52	51	50	49
	Bit address 104x																
TC 1 to 16	Word address 01F0																
		16	15	14	13	12	11	10	9	8	7	6	5	4	3	2	1
	Bit address 1F0x																
STC 1 to 16	Word address 00F1																
		16	15	14	13	12	11	10	9	8	7	6	5	4	3	2	1
	Bit address 0F1x																

X format: Sepam check-word

This format applies only to the Sepam check-word that may be accessed at the word address 100h. This word contains various items of information relating to:
- Sepam operating mode
- time-tagging of events.

Each data item contained in the Sepam check-word may be accessed bit by bit, from address **1000** for bit 0 to **100F** for bit 15.
- bit 15 : event present in event zone 1
- bit 14 : Sepam in “data loss” status in event zone 1
- bit 13 : Sepam not synchronous
- bit 12 : Sepam time not correct
- bit 11 : presence of events in event zone 2
- bit 10 : Sepam in "data loss" status in event zone 2
- bit 9 : major fault in Sepam
- bit 8 : partial fault in Sepam
- bit 7 : setting group A in service
- bit 6 : setting group B in service
- bit 1 : Sepam in local setting mode

□ other bits reserved (undetermined values).

Status changes of bits 1, 6, 7, 8, 10, 12, 13 and 14 of this word trigger the sending of a time-tagged event.

Use of remote annunciation

Sepam provides the communication link with 144 TS.
The remote indications (TS) are pre-assigned to protection and control functions which depend on the Sepam model.
The TSs may be read using the bit or word functions. Each TS transition is time-tagged and stored in the event stack (see chapter on time-tagging).

Address word 101: TS001 to TS016 (Bit address 1010 to 101F)

TS	Application	S40	S41	S42	T40	T42	M41	G40
1	Protection 50/51 unit 1	■	■	■	■	■	■	■
2	Protection 50/51 unit 2	■	■	■	■	■	■	■
3	Protection 50/51 unit 3	■	■	■	■	■	■	■
4	Protection 50/51 unit 4	■	■	■	■	■	■	■
5	Protection 50N/51N unit 1	■	■	■	■	■	■	■
6	Protection 50N/51N unit 2	■	■	■	■	■	■	■
7	Protection 50N/51N unit 3	■	■	■	■	■	■	■
8	Protection 50N/51N unit 4	■	■	■	■	■	■	■
9	Protection 49 RMS alarm set point				■	■	■	■
10	Protection 49 RMS tripping set point				■	■	■	■
11	Protection 37 (undercurrent)						■	
12	Protection 46 (neg. seq. O/C) unit 1	■	■	■	■	■	■	■
13	Protection 46 (neg. seq. O/C) unit 2	■	■	■	■	■	■	■
14	Protection 48/51LR (locked rotor)						■	
15	Protection 48/51LR (rotor locking on start)						■	
16	Protection 48/51LR (excessive starting time)						■	

Address word 102 : TS017 to TS032 (Bit address 1020 to 102F)

TS	Application	S40	S41	S42	T40	T42	M41	G40
17	Protection 27D (directional U/V) unit 1						■	
18	Protection 27D directional U/V) unit 2						■	
19	Protection 27/27S (undervoltage) unit 1	■	■	■	■	■	■	■
20	Protection 27/27S (undervoltage) unit 2	■	■	■	■	■	■	■
21	Protection 27R (rem. undervoltage)						■	
22	Protection 59 (overvoltage) unit 1	■	■	■	■	■	■	■
23	Protection 59 (overvoltage) unit 2	■	■	■	■	■	■	■
24	Protection 59N (overvoltage V0) unit 1	■	■	■	■	■	■	■
25	Protection 59N (overvoltage V0) unit 2	■	■	■	■	■	■	■
26	Protection 81H (overfrequency) unit 1	■	■	■	■	■	■	■
27	Protection 81H (overfrequency) unit 2	■	■	■	■	■	■	■
28	Protection 81L (underfrequency) unit 1	■	■	■	■	■	■	■
29	Protection 81L (underfrequency) unit 2	■	■	■	■	■	■	■
30	Protection 81L (underfrequency) unit 3	■	■	■	■	■	■	■
31	Protection 81L (underfrequency) unit 4	■	■	■	■	■	■	■
32	Protection 66 (number of starts)						■	

Address word 103: TS033 to TS048 (Bit address 1030 to 103F)

TS	Application	S40	S41	S42	T40	T42	M41	G40
33	Protection 67 unit 1			■		■		
34	Protection 67 unit 2			■		■		
35	Protection 67N unit 1		■	■		■	■	
36	Protection 67N unit 2		■	■		■	■	
37	Protection 47 (neg. sequence overvoltage)	■	■	■	■	■	■	■
38	Protection 32P (active overpower)		■	■			■	■
39	Protection 50BF (breaker failure)	■	■	■	■	■	■	■
40	Protection 32Q (reactive overpower)						■	■
41	Protection 51V (max. de I à retenue de tension)							■
42	TC fault	■	■	■	■	■	■	■
43	TP Phase fault	■	■	■	■	■	■	■
44	TP V0 fault	■	■	■	■	■	■	■
45	*Reserved*							
46	*Reserved*							
47	*Reserved*							
48	*Reserved*							

Address word 104: TS049 to TS064 (Bit address 1040 to 104F)

TS	Application	S40	S41	S42	T40	T42	M41	G40
49	*Reserved*							
50	*Reserved*							
51	*Reserved*							
52	*Reserved*							
53	*Reserved*							
54	*Reserved*							
55	*Reserved*							
56	*Reserved*							
57	*Reserved*							
58	*Reserved*							
59	*Reserved*							
60	*Reserved*							
61	*Reserved*							
62	*Reserved*							
63	*Reserved*							
64	*Reserved*							

Address word 105: TS065 to TS080 (Bit address 1050 to 105F)

TS	Application	S40	S41	S42	T40	T42	M41	G40
65	Protection 49T module 1 alarm set point sensor 1				■	■	■	■
66	Protection 49T module 1 tripping set point sensor 1				■	■	■	■
67	Protection 49T module 1 alarm set point sensor 2				■	■	■	■
68	Protection 49T module 1 tripping set point sensor 2				■	■	■	■
69	Protection 49T module 1 alarm set point sensor 3				■	■	■	■
70	Protection 49T module 1 tripping set point sensor 3				■	■	■	■
71	Protection 49T module 1 alarm set point sensor 4				■	■	■	■
72	Protection 49T module 1 tripping set point sensor 4				■	■	■	■
73	Protection 49T module 1 alarm set point sensor 5				■	■	■	■
74	Protection 49T module 1 tripping set point sensor 5				■	■	■	■
75	Protection 49T module 1 alarm set point sensor 6				■	■	■	■
76	Protection 49T module 1 tripping set point sensor 6				■	■	■	■
77	Protection 49T module 1 alarm set point sensor 7				■	■	■	■
78	Protection 49T module 1 tripping set point sensor 7				■	■	■	■
79	Protection 49T module 1 alarm set point sensor 8				■	■	■	■
80	Protection 49T module 1 tripping set point sensor 8				■	■	■	■

Address word 106: TS081 to TS096 (Bit address 1060 to 106F)

TS	Application	S40	S41	S42	T40	T42	M41	G40
81	Protection 49T module 2 alarm set point sensor 1				■	■	■	■
82	Protection 49T module 2 tripping set point sensor 1				■	■	■	■
83	Protection 49T module 2 alarm set point sensor 2				■	■	■	■
84	Protection 49T module 2 tripping set point sensor 2				■	■	■	■
85	Protection 49T module 2 alarm set point sensor 3				■	■	■	■
86	Protection 49T module 2 tripping set point sensor 3				■	■	■	■
87	Protection 49T module 2 alarm set point sensor 4				■	■	■	■
88	Protection 49T module 2 tripping set point sensor 4				■	■	■	■
89	Protection 49T module 2 alarm set point sensor 5				■	■	■	■
90	Protection 49T module 2 tripping set point sensor 5				■	■	■	■
91	Protection 49T module 2 alarm set point sensor 6				■	■	■	■
92	Protection 49T module 2 tripping set point sensor 6				■	■	■	■
93	Protection 49T module 2 alarm set point sensor 7				■	■	■	■
94	Protection 49T module 2 tripping set point sensor 7				■	■	■	■
95	Protection 49T module 2 alarm set point sensor 8				■	■	■	■
96	Protection 49T module 2 tripping set point sensor 8				■	■	■	■

Address word 107: TS097 to TS112 (Bit address 1070 to 107F)

TS	Application	S40	S41	S42	T40	T42	M41	G40
97	Recloser in service	■	■	■				
98	Recloser in progress	■	■	■				
99	Recloser final trip	■	■	■				
100	Recloser successful reclosing	■	■	■				
101	Send blocking input 1	■	■	■	■	■	■	■
102	Remote setting inhibited	■	■	■	■	■	■	■
103	Remote control inhibited	■	■	■	■	■	■	■
104	Sepam not reset after fault	■	■	■	■	■	■	■
105	TC/ position discrepancy	■	■	■	■	■	■	■
106	Matching fault or Trip Circuit Supervision	■	■	■	■	■	■	■
107	Disturbance recording stored	■	■	■	■	■	■	■
108	Control fault	■	■	■	■	■	■	■
109	Disturbance recording inhibited	■	■	■	■	■	■	■
110	Thermal protection inhibited	■	■	■	■	■	■	■
111	MET148-1 module sensor fault				■	■	■	■
112	MET148-2 module sensor fault				■	■	■	■

Address word 108: TS113 to TS128 (Bit address 1080 to 108F)

TS	Application	S40	S41	S42	T40	T42	M41	G40
113	Thermistor tripping	■	■	■	■	■	■	■
114	Thermistor alarm	■	■	■	■	■	■	■
115	External tripping 1	■	■	■	■	■	■	■
116	External tripping 2	■	■	■	■	■	■	■
117	External tripping 3	■	■	■	■	■	■	■
118	Buchholz tripping				■	■		
119	Thermostat tripping				■	■		
120	Pressure tripping				■	■		
121	Buchholz alarm				■	■		
122	Thermostat alarm				■	■		
123	Pressure alarm				■	■		
124	SF6 alarm	■	■	■	■	■	■	■
125	Recloser ready	■	■	■				
126	Inductive	■	■	■	■	■	■	■
127	Capacitive	■	■	■	■	■	■	■
128	Phase inverse rotation	■	■	■	■	■	■	■

Address word 109: TS129 to TS144 (Bit address 1090 to 109F)

TS	Application	S40	S41	S42	T40	T42	M41	G40
129	Send blocking input 2			■				
130	*Reserved*							
131	*Reserved*							
132	*Reserved*							
133	*Reserved*							
134	*Reserved*							
135	*Reserved*							
136	*Reserved*							
137	*Reserved*							
138	*Reserved*							
139	*Reserved*							
140	*Reserved*							
141	*Reserved*							
142	*Reserved*							
143	*Reserved*							
144	*Reserved*							

Use of remote control orders

Remote control orders are pre-assigned to protection, control and metering functions.
Remote control orders may be carried out in two modes:
■ direct mode
■ confirmed SBO (select before operate) mode.
It is possible to inhibit all the remote control orders via one logic input assigned to the function "inhibit remote control", with the exception of the remote control tripping order TC1 which can be activated at any time.
The parameter setting of the logic input may be done in two modes:
■ inhibition if the input is at 1
■ inhibition if the input is at 0 (negative input)
The device tripping and closing and recloser enabling and disabling remote control orders are acknowledged if the "CB control" function is confirmed and if the inputs required for that logic are present [(1)].

Direct remote control order
The remote control order is executed when it is written in the remote control word. The program logic resets it to zero after the remote control order is acknowledged.

Confirmed SBO remote control order
(select before operate)
In this mode, remote control orders involve two steps:
■ selection by the master of the order to be sent by writing the bit in the STC word and checking of the selection by rereading the word
■ execution of the order to be sent by writing the bit in the TC word.
The remote control order is executed if the bit in the STC word and the bit in the associated word are set: the program logic resets the STC bit and TC bits to zero after the remote control order is acknowledged.
Deselection of the STC bit takes place:
■ if the master deselects it by writing in the STC word
■ if the master selects (write bit) a bit other than the one already selected
■ if the master sets a bit in the TC word which does not match the selection. In this case, no remote control order is executed.

(1) *MES108 or MES114 modules.*

Address word 0F0: TC1 to 16 (Bit address 0F00 to 0F0F)

TC	Application	S40	S41	S42	T40	T42	M41	G40
1	Tripping	■	■	■	■	■	■	■
2	Closing	■	■	■	■	■	■	■
3	Swtiching to setting group A	■	■	■	■	■	■	■
4	Switching to setting group B	■	■	■	■	■	■	■
5	Sepam reset	■	■	■	■	■	■	■
6	Peak demand current zero reset	■	■	■	■	■	■	■
7	Inhibit thermal protection				■	■	■	■
8	Inhibit disturbance recording triggering (OPG*)	■	■	■	■	■	■	■
9	Confirm disturbance recording triggering (OPG*)	■	■	■	■	■	■	■
10	Manual disturbance recording triggering (OPG*)	■	■	■	■	■	■	■
11	Enable recloser	■	■	■				
12	Disable recloser	■	■	■				
13	Confirm thermal protection				■	■	■	■
14	Reset undercurrent protection						■	
15	*Reserved*							
16	*Reserved*							

** OPG : French acronym for disturbance recording*

Remote control of the analog output

The analog output of the MSA141 module may be set up for remote control via the Modbus communication link (word address 10F). The usable range of the numerical value transmitted is defined by the "min. value" and "max. value" settings of the analog output.
This function is not affected by remote control inhibition conditions.

Time-tagging of events

Presentation

The communication system time-tags the data processed by Sepam. The time-tagging function assigns a date and precise time to status changes so that they can be accurately classified over time.
Time-tagged data are events that can be processed in the control room by the remote monitoring and control system using the communication protocol for the data logging and chronological display functions.
Sepam time-tags the following data:
- logic inputs
- remote indications
- information pertaining to Sepam equipment (see Sepam check-word).

Time-tagging is carried out systematically.
The remote monitoring and control system provides a chronological display of the time-tagged data.

Time-tagging

Sepam time-tagging of events uses absolute time (see section on date and time). When an event is detected, it is tagged with the absolute time given by Sepam's internal clock.
All the Sepam internal clocks must be synchronized so as to avoid drifts and all be the same, thereby allowing inter-Sepam chronological sorting.
Sepam has two mechanisms for managing its internal clock:
- **time-setting**:

to initialize or modify the absolute time. A special Modbus message, called "time message", is used to time-set each Sepam
- **synchronization**:

to avoid Sepam internal clock drifts and ensure inter-Sepam synchronization.
Synchronization may be carried out according to two principles:
- **internal synchronization**:

via the communication network without any additional wiring
- **external synchronization**:

via a logic input with additional wiring.
At the time of commissioning, the user sets the synchronization mode parameter.

Initialization of the time-tagging function
Each time the communication system is initialized (energizing of Sepam), the events are generated in the following order:
- appearance of "data loss"
- appearance of "incorrect time"
- appearance of "not synchronous"
- disappearance of "data loss".

The function is initialized with the current values of the remote indication and logic input status without creating any events related to those data. After the initialization phase, event detection is activated.
It can only be interrupted by saturation of the internal event storage queue or by the presence of a major fault in Sepam.

Date and time

An absolute date and time are generated internally by Sepam, comprising the following information: Year: Month: Day: Hour: minute: millisecond.
The date and time format is standardized (ref.: IEC 870-5-4).
The internal clock of Sepam series 40 is saved for 24 hours. After a power outage that lasts for more than 24 hours, the time must be reset.
The internal clock of Sepam series 40 may be time-set in three different ways:
- by the remote monitoring and control system, via the Modbus link,
- via the SFT2841 software tool, "General characteristics" screen
- via the display of Sepam units equipped with the advanced UMI.

The time tagged on events is encoded in 8 bytes as follows:

b15	b14	b13	b12	b11	b10	b09	b08	b07	b06	b05	b04	b03	b02	b01	b00	word
0	0	0	0	0	0	0	0	0	Y	Y	Y	Y	Y	Y	Y	word 1
0	0	0	0	M	M	M	M	0	0	0	D	D	D	D	D	word 2
0	0	0	H	H	H	H	H	0	0	mn	mn	mn	mn	mn	mn	word 3
ms	ms	ms	ms	ms	ms	ms	ms	ms	ms	ms	ms	ms	ms	ms	ms	word 4

Y - 1 byte for years: varies from 0 to 99 years.
The remote monitoring and control system must ensure that the year 00 is greater than 99.
M - 1 byte for months: varies from 1 to 12.
D - 1 byte for days: varies from 1 to 31.
H - 1 byte for hours: varies from 0 to 23.
mn - 1 byte for minutes: varies from 0 to 59.
ms - 2 bytes for milliseconds: varies from 0 to 59999.
These data are encoded in binary format. Sepam is time-set via the "write word" function (function 16) at the address 0002 with a mandatory 4-word time message.
The bits set to "0" in the description above correspond to format fields which are not used in and not managed by Sepam.
Since these bits can be transmitted to Sepam with random values, Sepam performs the necessary disabling.
Sepam does not check the consistency or validity of the date and time received.

Synchronization clock

A synchronization clock is required to set the Sepam date and time; Schneider Electric has tested the equipment sold by the following suppliers:
- Gorgy Timing, ref.: RT300, equpped with the M540 module
- SCLE, ref.: RH 2000 -B.

Time-tagging of events

Reading of events

Sepam provides the master or masters with two event tables. The master reads the event table and acknowledges by writing the exchange word.
Sepam updates its event table.

The events sent by Sepam are not sorted chronologically.

Structure of event table 1:
- exchange word 0040 h
- event number 1
0041 h ... 0048 h
- event number 2
0049 h ... 0050 h
- event number 3
0051 h ... 0058 h
- event number 4
0059 h ... 0060 h

Structure of event table 2:
- exchange word 0070 h
- event number 1
0071 h ... 0078 h
- event number 2
0079 h ... 0080 h
- event number 3
0081 h ... 0088 h
- event number 4
0089 h ... 0090 h

The master has to read a block of 33 words starting at the address 0040h/0070h, or 1 word at the address 0040h/0070h.

Exchange word
The exchange word is used to manage a special protocol to be sure not to lose events following a communication problem. The event table is numbered for that purpose.
The exchange word includes two fields:
- most significant byte (MSB) = exchange number (8 bits): 0..255

b15	b14	b13	b12	b11	b10	b09	b08

Exchange number: 0 .. 255

Description of the MSB of the exchange word.

The exchange number contains a numbering byte which identifies the exchanges. The exchange number is initialized to zero when Sepam is energized. When it reaches its maximum value (FFh), it automatically returns to 0.
Sepam numbers the exchanges and the master acknowledges the numbering.

- least significant byte (LSB) = number of events (8 bits): 0..4.

b07	b06	b05	b04	b03	b02	b01	b00

Exchange number : 0 .. 4

Description of the LSB of the exchange word.

Sepam indicates the number of significant events in the event table in the least significant byte of the exchange word. Each non-significant event word is initialized to zero.

Event table acknowledgment
To inform Sepam that the block read by the master has been correctly received, the master writes the number of the last exchange made in the “Exchange number” field, and resets the "Number of events" field of the exchange word to zero. After acknowledgment, the 4 events in the event table are initialized to zero and the old, acknowledged events are erased in Sepam.
Until the exchange word written by the master becomes “X,0” (with X = number of the previous exchange that the master wishes to acknowledge), the exchange word in the table remains at “X, number of previous events”.
Sepam only increments the exchange number when new events are present (X+1, number of new events).
If the event table is empty, Sepam performs no processing operations when the master reads the event table or the exchange word.
The data are encoded in binary format.

Sepam in data loss (1) / no data loss (0) status
Sepam has two internal storage queues with a capacity of 64 events. If one of the queues becomes saturated, i.e. 63 events already present, the "**data loss**" event is generated by Sepam in the 64th position, and event detection carries on.
The least recent events are lost to make room for the most recent ones.

Time-tagging of events

Description of event encoding

An event is encoded in 8 words with the following structure:

Most significant byte	Least significant byte	
Word 1: type of event		
08	00	For remote indications, internal data logic inputs
Word 2: event address		
		See bit adresses 1000 to 105F
Word 3: reserved		
00	00	
Word 4: falling edge: disappearance or rising edge: appearance		
00	00	Falling edge
00	01	Rising edge
Word 5: year		
00	0 to 99 (year)	
Word 6: month-day		
1 to 12 (month)	1 to 31 (day)	
Word 7 : hours-minutes		
0 to 23 (hours)	0 to 59 (minutes)	
Word 8: milliseconds		
0 to 59999		

Time-tagging of events

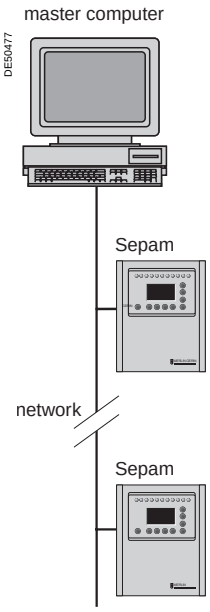

Architecture for "internal synchronization" via the communication network.

Synchronization

Sepam accommodates two synchronization modes:

■ "internal via the network" synchronization mode by the broadcasting of a "time message" frame via the communication network. Slave number 0 is used for broadcasting

■ "external" synchronization mode via a logic input.

The synchronization mode is selected at the time of commissioning via SFT2841.

Internal synchronization via the network mode

The “time message" frame is used for both time-setting and synchronization of Sepam. In this case, it must be sent regularly at brief intervals (between 10 and 60 seconds) in order for synchronous time to be obtained.

Sepam’s internal clock is reset each time a new time frame is received, and synchronization is maintained if the reset amplitude is less than 100 milliseconds.

With internal synchronization via the network, accuracy is linked to the master and its mastery of time frame transmission in the communication network.

Sepam is synchronized without delay at the end of the receipt of the frame.

Time changes are made by sending a frame to Sepam with the new date and time. Sepam then switches into a transitional non-synchronous status.

When Sepam is in synchronous status, if no "**time message**” is received for 200 seconds, the appearance of the “not synchronous” event is triggered.

Time-tagging of events

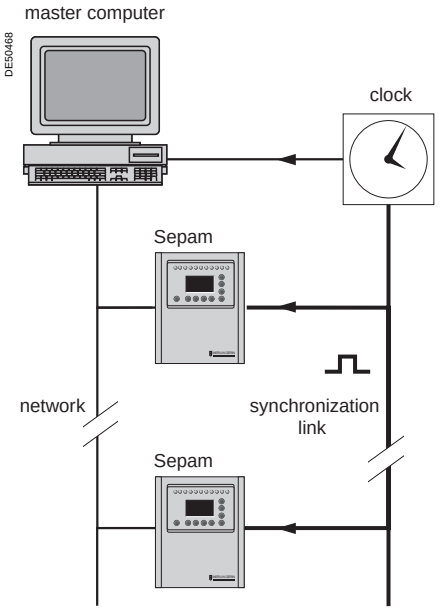

Architecture for "external synchronization" via a logic input.

Synchronization (cont'd)

External synchronization via a logic input mode

Sepam can be synchronized externally by means of a logic input (I21) (the MES114 module is required).
Synchronization is carried out on the rising edge of the logic input.
Sepam can adapt to all synchronization "logical time pulse" periods from 10 to 60 s, by 10 s steps.
The shorter the synchronization period, the more accurate time-tagging of status changes is.
The first time frame is used to initialize Sepam with the absolute date and time (the following frames are used for the detection of any time changes).
The synchronization "logical time pulse" is used to reset Sepam's internal clock. In the initialization phase, when Sepam is in "non-synchronous" mode, resetting is allowed, within an amplitude of ± 4 seconds.
In the initialization phase, the resetting process (switching of Sepam into "synchronous" mode) is based on a measurement of the difference between Sepam's current time and the nearest ten second period. This measurement is taken at the time of the receipt of the "logical time pulse" following the initialization time frame. Resetting is allowed if the difference is less than or equal to 4 seconds, in which case Sepam switches to "synchronous" mode.
As of that time (after the switching to "synchronous" mode), the resetting process is based on the measurement of a difference (between Sepam's current time and the nearest ten second period at the time of the receipt of a "logical time pulse"), which is adapted to match the "logical time pulse" period.

The "logical time pulse" period is determined automatically by Sepam when it is energized, based on the first two pulses received: the "logical time pulse" must therefore be operational before Sepam is energized.

The synchronization function only operates after Sepam has been time-set, i.e. after the disappearance of the "incorrect time" event.

Any time changes greater than ± 4 seconds in amplitude are made by sending a new time frame. The switch from summer time to winter time (and vice versa) is made in this way as well.
There is a temporary loss of synchronism when the time is changed.
The external synchronization mode requires additional equipment, a "synchronization clock " to generate a precise periodic synchronization time pulse.
If Sepam is in "correct time and synchronous" status, and if the difference in synchronism between the nearest ten second period and the receipt of the synchronization time pulse is greater than the synchronism error for 2 consecutive synchronization time pulses, it switches into non-synchronous status and generates the appearance of a "not synchronous" event.
Likewise, if Sepam is in "correct time and synchronous" status, the failure to receive a synchronization time pulse for 200 seconds generates the appearance of a "not synchronous" event.

Access to remote settings

Reading of remote settings (remote reading)

Settings accessible for remote reading
Reading of the settings of all the protection functions may be accessed remotely in 2 independent zones to enable operation with 2 masters.

Exchange principle
Remote reading of settings (remote reading) takes place in two steps:
■ first of all, the master indicates the code of the function for which it wishes to know the settings by means of a "request frame". The request is acknowledged, in the Modbus sense of the term, to free the network
■ the master then reads a reply zone to find the required information by means of a "reply frame". Each function has its own particular reply zone contents. The time needed between the request and the reply is linked to Sepam's low-priority cycle time and may vary from a few tens to several hundreds of ms.
■ setting zone 1
□ read: 1E00h-1E7Ch
□ read request: 1E80h
□ remote setting: 1F00h-1F7Ch
■ setting zone 2
□ read: 2000h -207Ch
□ read request: 2080h
□ remote setting: 2100h -217Ch

Request frame
The request is made by the master using a "write word" operation (code 6 or 16) at the address 1E80h or 2080h of a 1-word frame consisting of the following:

1E80h/2080h

B15	B14	B13	B12	B11	B10	B09	B08	B07	B06	B05	B04	B03	B02	B01	B00
Function code								Unit number							

The content of the address 1E80h/2080h may be read using a Modbus "read word" operation (code 3).
The function code field may have the following values:
■ 01h to 99h (BCD encoding) for protection functions.
The unit number field is used as follows:
■ for protection functions, it indicates the unit involved, varying from 1 to N, N being the maximum number of relays available in the Sepam
■ when only one unit of a protection function is available, this number field is not controlled.

Exception replies
In addition to the usual cases, Sepam can send Modbus type 07 exception replies (not acknowledged) if another remote reading request is being processed.

Reply frame
The reply, sent back by Sepam, fits into a zone with a maximum length of 25 words at the address 1E00h or 2000h, which comprises the following:

1E00h-1E7Ch/2000h-207Ch

B15	B14	B13	B12	B11	B10	B09	B08	B07	B06	B05	B04	B03	B02	B01	B00
Function code								Unit number							
Settings															
.....															
(special field for each function)															
.....															

This zone is read by a Modbus "read word" operation (code 3) at the address 2000h.
The length of the exchange may concern:
■ first word only (validity test)
■ maximum size of the zone (125 mots)
■ usable size of the zone (determined by the function being addressed).
However, reading must always begin at the first word in the zone (any other address triggers an exception reply "incorrect address").
The first word in the zone (function code and unit number) may have the following values:
xxyy: with
■ function code xx different from 00 and FFh
■ unit number yy different from FFh.
The settings are available and confirmed. They word is a copy of the "request frame". The zone contents remain valid until the next request is made.
■ **0000h**: no "request frame has yet been formulated.
This is espcially the case when Sepam is energized.
The other words are not significant..
FFFFh: the "request frame" has been processed, but the results in the "reply zone" are not yet available. It is necessary to repeat "reply frame" reading. The other words are not significant.
xxFFh: with the function code xx different from 00 and FFh. The read request for the settings of the designated function is not valid. The function is not included in the particular Sepam, or remote reading of it is not authorized: refer to the list of functions which accommodate remote reading of settings.

Access to remote settings

Remote setting

Data that can be remotely set

Writing of the settings of all the protection functions may be accessed remotely.

Exchange principle

Remote setting is allowed for Sepam units.
Remote setting is carried out for a given function unit by unit.
It takes place in two steps:

- first of all, the master indicates the function code and unit number, followed by the values of all the settings in the "write request frame". The request is acknowledged to free the network
- the master then reads a reply zone designed for checking that the settings have been processed. Each function has its own particular reply zone contents.
They are the same as those of the remote reading function reply frame.
To use remote setting, it is necessary to make all the settings for the function concerned, even if some of them have not changed.

Request frame

The request is made by the master using a "write n words" operation (code 16) at the address 1F00h or 2100h. The zone to be written contains a maximum of 125 words. It contains the values of all the settings and consists of the following:

1F00h/2100h

B15	B14	B13	B12	B11	B10	B09	B08	B07	B06	B05	B04	B03	B02	B01	B00
Function code								Unit number							
Settings															
.....															
(special field for each function)															
.....															

The content of the address 2100h may be read using a "read n words" operation (code 3).

- the function code field may have the following values:
01h to 99h (BCD encoding) for the list of protection functions F01 to F99
- the unit number field is used as follows:
for protection functions, it indicates the unit involved, varying from 1 to N, N being the maximum number of units available in the Sepam. It may never be equal to 0.

Exception reply

In addition to the usual cases, le Sepam can send type 07 exception replies (not acknowledged) if:

- another remote reading or setting request is being processed
- the remote setting function is inhibited.

Reply frame

The reply sent back by Sepam is the same as the remote reading reply frame. It fits into a zone with a maximum length of 125 words at the address 1E00h or 2000h, and is composed of the effective settings of the function following a semantic check:

1E00h-1E7Ch/2000h-207Ch

B15	B14	B13	B12	B11	B10	B09	B08	B07	B06	B05	B04	B03	B02	B01	B00
Function code								Unit number							
Settings															
.....															
(special field for each function)															
.....															

This zone is read by a "read n words" operation (code 3) at the address 1E00h or 2000h.

The length of the exchange may concern:

- first word only (validity test)
- maximum size of the zone (125 words)
- usable size of the zone (determined by the function being addressed).

However, reading must always begin at the first word in the zone (any other address triggers an exception reply "incorrect address").

The first word in the zone (function code and unit number) has the same values as those described for the remote reading reply frame.

- **xxyy**: with:
  - function code xx different from 00 and FFh
  - unit number yy different from FFh.

The settings are available and confirmed. The word is a copy of the "request frame". The zone contents remain valid until the next request is made.

- **0000h**: no "request frame has yet been formulated.

This is espcially the case when Sepam is energized.

The other words are not significant.

- **FFFFh**: the "request frame" has been processed, but the results in the "reply zone" are not yet available. It is necessary to repeat "reply frame" reading. The other words are not significant.
- **xxFFh**: with the function code xx different from 00 and FFh. The read request for the settings of the designated function is not valid. The function is not included in the particular Sepam, or access to settings is impossible, in both read and write modes.

Access to remote settings

Description of settings

Data format

All the settings are transmitted in signed 32-bit integer format (encoding, as a complement of 2).

Particular setting value:

7FFF FFFFh means that the setting is out of the validity range.

① The Enabled or Disabled setting is encoded as follows:

0 = Disabled, 1 = Enabled

② The tripping curve setting is encoded as follows:

0 = definite

1 = inverse	9 = IEC VIT/B
2 = long time inverse	10 = IEC EIT/C
3 = very inverse	11 = IEEE Mod. inverse
4 = extremely inverse	12 = IEEE Very inverse
5 = ultra inverse	13 = IEEE Extr. inverse
6 = RI	14 = IAC inverse
7 = IEC SIT/A	15 = IAC very inverse
8 = IEC LTI/B	16 = IAC extr. inverse

③ The timer hold delay curve setting is encoded as follows:

0 = definite time

1 = IDMT

④ The H2 restraint variable is encoded as follows:

0 = H2 restraint

1 = no H2 restraint

⑤ The tripping curve setting is:

0 = definite time

1 = IDMT

⑥ Setting of latching and CB control

0 = No

1 = Yes

⑦ Tripping curve for negative sequence undercurrent:

0 = definite	9 = IEC VIT/B	12 = IEEE Very inverse
7 = IEC SIT/A	10 = IEC EIT/C	13 = IEEE Extr. inverse
8 = IEC LTI/B	11 = IEEE Mod. inverse	17 = Schneider specific

⑧ The activation of each of the cycles is encoded as follows:

Correspondence between bit position / protection according to the table below:

Bit	Activation by
0	Instantaneous phase overcurrent, unit 1
1	Time-delayed phase overcurrent, unit 1
2	Instantaneous phase overcurrent, unit 2
3	Time-delayed phase overcurrent, unit 2
4	Instantaneous phase overcurrent, unit 3
5	Time-delayed phase overcurrent, unit 3
6	Instantaneous phase overcurrent, unit 4
7	Time-delayed phase overcurrent, unit 4
8	Instantaneous earth fault, unit 1
9	Time-delayed earth fault, unit 1
10	Instantaneous earth fault, unit 2
11	Time-delayed earth fault, unit 2
12	Instantaneous earth fault, unit 3
13	Time-delayed earth fault, unit 3
14	Instantaneous earth fault, unit 4
15	Time-delayed earth fault, unit 4
16	Instantaneous directional earth fault, unit 1
17	Time-delayed directional earth fault, unit 1
18	Instantaneous directional earth fault, unit 2
19	Time-delayed directional earth fault, unit 2
20	Instantaneous directional phase overcurrent, unit 1
21	Time-delayed directional phase overcurrent, unit 1
22	Instantaneous directional phase overcurrent, unit 2
23	Time-delayed directional phase overcurrent, unit 2
24	V_TRIPCB (logical equation)

The bit status is encoded as follows:

0 = No activation by the protection function

1 = Activation by the protection function.

Access to remote settings

General settings (read only)

Function number: 3002

Setting	Data	Format/Unit
1	Rated frequency	0 = 50 Hz, 1 = 60 Hz
2	Remote setting enabled	1 = disabled
3	Working language	0 = English, 1 = other
4	Active group of settings	0 = Group A 1 = Group B 3 = Choice by I13 4 = Choice by remote control
5	Setting mode	0 = TMS, 1 = I/Is
6	Phase CT rating	0 = 5 A, 1 = 1 A, 2 = LPCT
7	Number of phase CTs	0 = 3 CTs, 1 = 2 CTs
8	Rated current In	A
9	Basic current Ib	A
10	Residual current determination mode	0 = None 1 = 2 A CSH 2 = 20 A CSH 3 = CSH + 1 A CT 4 = CSH + 5 A CT 5 = ACE990 Range 1 6 = ACE990 Range 2 7 = 5 A CSH 8 = CSH + sensitive 1 A CT 9 = CSH + sensitive 5 A CT
11	Rated residual current (In0)	A
12	Integration period	0 = 5 mn, 1 = 10 mn 2 = 15 mn, 3 = 30 mn 4 = 60 mn
13	*Reserved*	
14	Rated primary voltage Unp	V
15	Rated secondary voltage Uns	0 = 100 V, 1 = 110 V 2 = 115 V, 3 = 120 V 4 = 200 V, 5 = 230 V
16	VT wiring	0 = 3 V, 1 = 2 U, 2 = 1 U
17	Residual voltage mode	0 = None 1 = Σ 3 V 2 = external VT – Uns/$\sqrt{3}$ 3 = external VT – Uns/3
18	Type of cubicle	0 = incomer 1= feeder
19	Increment active power	0.1 kW.h
20	Increment reactive power	0.1 kvar.h

Phase overcurrent protection settings (50/51)

Function number: 01xx

unit 1: xx = 01 to unit 4: xx = 04

Setting	Data	Format/Unit
1	Latching	⑥
2	CB control	⑥
3	Activity	①
4	Confirmation	0 = none, 1 = neg. seq. overvoltage, 2 = undervoltage
5	*Reserved*	-
6	*Reserved*	-
7	Group A – tripping curve	②
8	Group A – threshold current	0.1 A
9	Group A – tripping time delay	10 ms
10	Group A – timer hold curve	③
11	Group A – timer hold delay	10 ms
12	*Reserved*	-
13	*Reserved*	-
14	*Reserved*	-
15	*Reserved*	-
16	Group B – tripping curve	②
17	Group B – threshold current	0.1 A
18	Group B – tripping time delay	10 ms
19	Group B – timer hold curve	③
20	Group B – timer hold delay	10 ms
21	*Reserved*	
22	*Reserved*	
23	*Reserved*	
24	*Reserved*	

Access to remote settings

Earth fault protection settings (50N/51N)
Function number: 02xx
unit 1: xx = 01 to unit 4 : xx = 04

Setting	Data	Format/Unit
1	Latching	⑥
2	CB control	⑥
3	Activity	①
4	Type of I0	0 calculated, 1 measured
5	*Reserved*	-
6	*Reserved*	-
7	Group A – tripping curve	②
8	Group A – threshold current	0.1 A
9	Group A – tripping time delay	10 ms
10	Group A – timer hold curve	③
11	Group A – timer hold delay	10 ms
12	Group A – H2 restraint	0 yes, 1 no
13	*Reserved*	-
14	*Reserved*	-
15	*Reserved*	-
16	*Reserved*	-
17	Group B – tripping curve	②
18	Group B – threshold current	0.1 A
19	Group B – tripping time delay	10 ms
20	Group B – timer hold curve	③
21	Group B – timer hold delay	10 ms
22	Group B – H2 restraint	0 yes, 1 no
23	*Reserved*	-
24	*Reserved*	-
25	*Reserved*	-
26	*Reserved*	-

Negative sequence / unbalance protection settings (46)
Function number: 03xx
unit 1: xx = 01 to unit 2: xx = 02

Setting	Data	Format/Unit
1	Latching	⑥
2	CB control	⑥
3	Activity	①
4	*Reserved*	-
5	*Reserved*	-
6	Tripping curve	⑦
7	Threshold current	% Ib
8	Tripping time delay	10 ms
9	*Reserved*	-
10	*Reserved*	-
11	*Reserved*	-
12	*Reserved*	-

Protection phase undercurrent settings (37)
Function number: 0501

Setting	Data	Format/Unit
1	Latching	⑥
2	CB control	⑥
3	Activity	①
4	*Reserved*	-
5	*Reserved*	-
6	Threshold current	% Ib
7	Tripping time delay	10 ms
8	*Reserved*	-
9	*Reserved*	-
10	*Reserved*	-
11	*Reserved*	-

Access to remote settings

Locked rotor, excessive starting time protection settings (48/51LR)
Function number: 0601

Setting	Data	Format/Unit
1	Latching	⑥
2	CB control	⑥
3	Activity	①
4	*Reserved*	-
5	*Reserved*	-
6	Threshold current	%
7	Excessive starting time delay	10 ms
8	Locked rotor time delay	10 ms
9	Locked rotor on start time delay	10 ms
10	*Reserved*	-
11	*Reserved*	-
12	*Reserved*	-
13	*Reserved*	-

Starts per hour protection settings (66)
Function number: 0701

Setting	Data	Format/Unit
1	Latching	⑥
2	*Reserved*	-
3	Activity	①
4	*Reserved*	-
5	*Reserved*	-
6	Period of time	Hours
7	Total number of starts	1
8	Number of consecutive hot starts	1
9	Number of consecutive starts	1
10	Time delay between starts	Minutes
11	*Reserved*	-
12	*Reserved*	-
13	*Reserved*	-
14	*Reserved*	-

Positive sequence undervoltage protection settings (27D)
Function number: 08xx
unit 1 : xx = 01, unit 2 : xx = 02

Setting	Data	Format/Unit
1	Latching	⑥
2	CB control	⑥
3	Activity	①
4	*Reserved*	-
5	*Reserved*	-
6	Threshold voltage	% Unp
7	Tripping time delay	10 ms
8	*Reserved*	-
9	*Reserved*	-
10	*Reserved*	-
11	*Reserved*	-

Remanent undervoltage protection setting (27R)
Function number: 0901

Setting	Data	Format/Unit
1	Latching	-
2	*Reserved*	-
3	Activity	①
4	*Reserved*	-
5	*Reserved*	-
6	Threshold voltage	% Unp
7	Tripping time delay	10 ms
8	*Reserved*	-
9	*Reserved*	-
10	*Reserved*	-
11	*Reserved*	-

Access to remote settings

Undervoltage protection settings (27/27S)
Function number: 10xx
unit 1: xx = 01 to unit 2: xx = 02

Setting	Data	Format/Unit
1	Latching	⑥
2	CB control	⑥
3	Activity	①
4	*Reserved*	-
5	*Reserved*	-
6	Voltage mode	0 = phase-to-neutral, 1 = phase-to-phase
7	Threshold voltage	% Unp/Vnp
8	Tripping time delay	10 ms
9	*Reserved*	-
10	*Reserved*	-
11	*Reserved*	-
12	*Reserved*	-

Overvoltage protection settings (59)
Function number: 11xx
unit 1: xx = 01 to unit 2 : xx = 02

Setting	Data	Format/Unit
1	Latching	⑥
2	CB control	⑥
3	Activity	①
4	*Reserved*	-
5	*Reserved*	-
6	Voltage mode	0 = phase-to-neutral 1 = phase-to-phase
7	Threshold voltage	% Unp/Vnp
8	Tripping time delay	10 ms
9	*Reserved*	-
10	*Reserved*	-
11	*Reserved*	-
12	*Reserved*	-

Neutral voltage displacement protection settings (59N)
Function number: 12xx
unit 1: xx = 01 to unit 2: xx = 02

Setting	Data	Format/Unit
1	Latching	⑥
2	CB control	⑥
3	Activity	①
4	*Reserved*	-
5	*Reserved*	-
6	Threshold voltage	% Unp
7	Tripping time delay	10 ms
8	*Reserved*	-
9	*Reserved*	-
10	*Reserved*	-
11	*Reserved*	-

Overfrequency protection settings (81H)
Function number: 13xx
unit 1: xx = 01 to unit 2: xx = 02

Setting	Data	Format/Unit
1	Latching	⑥
2	CB control	⑥
3	Activity	①
4	*Reserved*	-
5	*Reserved*	-
6	Frequency threshold	0.1 Hz
7	Tripping time delay	10 ms
8	*Reserved*	-
9	Vs set point	% Unp
10	*Reserved*	-
11	*Reserved*	-

Underfrequency protection settings (81L)
Function number: 14xx
unit 1: xx = 01 to unit 4: xx = 04

Setting	Data	Format/Unit
1	Latching	⑥
2	CB control	⑥
3	Activity	①
4	*Reserved*	-
5	*Reserved*	-
6	Frequency threshold	0.1 Hz
7	Tripping time delay	10 ms
8	Restraint	0 none 1 on frequency variation
9	Vs set point	% Unp
10	Inhibited threshold	on frequency variation

Temperature monitoring protection settings (38/49T)
Function number: 15xx
unit 1 : xx = 01, unit 16 : xx = 16

Setting	Data	Format/Unit
1	Latching	⑥
2	CB control	⑥
3	Activity	①
4	*Reserved*	-
5	*Reserved*	-
6	Alarm set point	°C
7	Trip set point	°C
8	*Reserved*	-
9	*Reserved*	-
10	*Reserved*	-
11	*Reserved*	-

Recloser function settings (79)
Function number: 17

Setting	Data	Format/Unit
1	Activity	①
2	Number of cycles	0 to 4
3	Reclaim time	10 ms
4	Safety time until ready	10 ms
5	Dead time extension	⑥
6	Maximum waiting time	10 ms
7	*Reserved*	-
8	*Reserved*	-
9	Cycle 1 activation mode	⑧
10	Cycle 1 dead time	10 ms
11	*Reserved*	-
12	*Reserved*	-
13	Cycle 2, 3, 4 activation mode	⑧
14	Cycle 2 dead time	10 ms
15	Cycle 3 dead time	10 ms
16	Cycle 4 dead time	10 ms
17	*Reserved*	-
18	*Reserved*	-

Access to remote settings

Negative sequence overvoltage protection settings (47)
Function number: 1901

Setting	Data	Format/Unit
1	Latching	⑥
2	CB control	⑥
3	Activity	①
4	*Reserved*	-
5	*Reserved*	-
6	Threshold voltage	% Unp
7	Tripping time delay	10 ms
8	*Reserved*	-
9	*Reserved*	-
10	*Reserved*	-
11	*Reserved*	-

Breaker failure protection settings (50BF)
Function number: 2001

Setting	Data	Format/Unit
1	Latching	⑥
2	*Reserved*	-
3	Activity	①
4	*Reserved*	-
5	*Reserved*	-
6	Use close position of circuit breaker	⑥
7	Is set point	0.1 A
8	Tripping time delay	10 ms
9	*Reserved*	-
10	*Reserved*	-
11	*Reserved*	-
12	*Reserved*	-

Directional phase overcurrent protection settings (67)
Function number: 21xx
unit 1 : xx = 01, unit 2 : xx = 02

Setting	Data	Format/Unit
1	Latching	⑥
2	CB control	⑥
3	Activity	①
4	*Reserved*	-
5	*Reserved*	-
6	Group A – direction	0 line, 1 busbar
7	Group A – characteristic angle	0 = 30° angle 1 = 45° angle 2 = 60° angle
8	Group A – tripping logic	0 : 1 on 3, 1 : 2 on 3
9	Group A – tripping curve	②
10	Group A – Is set point	0.1 A
11	Group A – tripping time delay	10 ms
12	Group A – timer hold curve	③
13	Group A – timer hold delay	10 ms
14	*Reserved*	-
15	*Reserved*	-
16	*Reserved*	-
17	*Reserved*	-
18	Group B – direction	0 line, 1 busbar
19	Group B – characteristic angle	0 = 30° angle 1 = 45° angle 2 = 60° angle
20	Group B – tripping logic	0 : 1 on 3, 1 : 2 on 3
21	Group B – tripping curve	②
22	Group B – Is set point	0.1 A
23	Group B – tripping time delay	10 ms
24	Group B – timer hold curve	③
25	Group B – timer hold delay	10 ms
26	*Reserved*	-
27	*Reserved*	-
28	*Reserved*	-
29	*Reserved*	-

Directional earth fault protection settings (67N)
Function number: 22xx
unit 1: xx = 01 to unit 2: xx = 02

Setting	Data	Format/Unit
1	Latching	⑥
2	CB control	⑥
3	Activity	①
4	Type	0 = projection 1 = directionalized
5	Type of I0 (Sum or Core balance CT)	0 calculated, 1 measured
6	*Reserved*	-
7	*Reserved*	-
8	Group A – direction	0 line, 1 busbar
9	Group A – characteristic angle	0 = -45° angle 1 = 0° angle 2 = 15° angle 3 = 30° angle 4 = 45° angle 5 = 60° angle 6 = 90° angle
10	Group A – sector	2 = 76° sector 3 = 83° sector 4 = 86° sector
11	Group A – tripping curve	②
12	Group A – threshold current	0.1 A
13	Group A – tripping time delay	10 ms
14	Group A – Vs0	% Unp
15	Group A – timer hold curve	③
16	Group A – timer hold delay	10 ms
17	Group A – memory time	10 ms
18	Group A – memory voltage	% Unp
19	*Reserved*	-
20	*Reserved*	-
21	*Reserved*	-
22	*Reserved*	-
23	Group B – direction	0 line, 1 busbar
24	Group B – characteristic angle	0 = -45° angle 1 = 0° angle 2 = 15° angle 3 = 30° angle 4 = 45° angle 5 = 60° angle 6 = 90° angle
25	Group B – sector	2 = 76° sector 3 = 83° sector 4 = 86° sector
26	Group B – tripping curve	②
27	Group B – threshold current	0.1 A
28	Group B – tripping time delay	10 ms
29	Group B – Vs0	% Unp
30	Group B – timer hold curve	③
31	Group B – timer hold delay	10 ms
32	Group B – memory time	10 ms
33	Group B – memory voltage	% Unp
34	*Reserved*	-
35	*Reserved*	-
36	*Reserved*	-
37	*Reserved*	-

Access to remote settings

Active overpower protection settings (32P)
Function number: 23xx
unit 1 : xx = 01 to unit 2 : xx = 02

Setting	Data	Format/Unit
1	Latching	⑥
2	CB control	⑥
3	Activity	①
4	Type	0 = reverse power 1 = overpower
5	*Reserved*	-
6	*Reserved*	-
7	Ps set point	100 W
8	Tripping time delay	10 ms
9	*Reserved*	-
10	*Reserved*	-
11	*Reserved*	-
12	*Reserved*	-

Reactive overpower protection settings (32Q)
Function number: 2401

Setting	Data	Format/Unit
1	Latching	⑥
2	CB control	⑥
3	Activity	①
4	Type	0 = reverse power 1 = overpower
5	*Reserved*	-
6	*Reserved*	-
7	Qs set point	100 var
8	Tripping time delay	10 ms
9	*Reserved*	-
10	*Reserved*	-
11	*Reserved*	-
12	*Reserved*	-

Voltage-restrained phase overcurrent protection settings (51V)
Function number: 2501

Setting	Data	Format/Unit
1	Latching	⑥
2	CB control	⑥
3	Activity	①
4	*Reserved*	-
5	*Reserved*	-
6	Tripping curve	②
7	Threshold current	0.1 A
8	Tripping time delay	10 ms
9	Timer hold curve	③
10	Timer hold delay	10 ms
11	*Reserved*	-
12	*Reserved*	-
13	*Reserved*	-
14	*Reserved*	-

TC monitoring settings (TC)
Function number: 2601

Setting	Data	Format/Unit
1	*Reserved*	-
2	*Reserved*	-
3	Activity	①
4	*Reserved*	-
5	*Reserved*	-
6	Behavior on 46, 51N, 32P, 32Q functions	0 none, 1 inhibition
7	Tripping time delay	10 ms
8	*Reserved*	-
9	*Reserved*	-
10	*Reserved*	-
11	*Reserved*	-

TP monitoring settings (TP)
Function number: 2701

Setting	Data	Format/Unit
1	*Reserved*	-
2	*Reserved*	-
3	Activity	①
4	*Reserved*	-
5	*Reserved*	-
6	Check loss of 3 V/2 U	⑥
7	Test current	⑥
8	Use Vi, Ii criterion	⑥
9	Behavior on 27/27S, 27D, 32P, 32Q, 47, 51V, 59, 59N functions	0 none, 1 inhibition
10	Behavior on 67 function	0 non directional, 1 inhibition
11	Behavior on 67N function	0 non directional, 1 inhibition
12	Vi set point	%
13	Ii set point	%
14	Time delay loss 3 V/ 2 U	10 ms
15	Time delay Vi, Ii	10 ms
16	*Reserved*	-
17	*Reserved*	-
18	*Reserved*	-
19	*Reserved*	-

Disturbance recording

Presentation

The disturbance recording function is used to record analog and logical signals during a time interval.
Sepam series 40 can store up to 19 records.
Each record comprises two files:
- configuration file with suffix .CFG
- data file with suffix .DAT.

The data of each record may be transferred via the Modbus link.
It is possible to transfer 1 to 19 records to a remote monitoring and control system. A record may be transferred as many times as possible, until it is overwritten by a new record.
If a record is made by Sepam while the oldest record is being transferred, the oldest record is stopped.
If a command (e.g. remote read or remote setting request) is carried out during the transfer of a disturbance recording record, the record in not disturbed.

Time-setting
Each record can be dated.
Time-setting of Sepam is described in the "Time-tagging of events" section.

Transferring records

Transfer requests are made record by record. A configuration file and a data file are produced for each record.
The master sends the commands to:
- find out the characteristics of the records stored in an identification zone
- read the contents of the different files
- acknowledge each transfer
- reread the identification zone to ensure that the record still appears in the list of records available.

2 transfer zones are available:
- transfer zone 1
  - request frame: 2200h-2203h
  - identification zone: starting at 2204h
  - reply frame: starting at 2300h
- transfer zone 2
  - request frame: 2400h-2403h
  - identification zone: starting at 2404h
  - reply frame: starting at 2500h.

Reading the identification zone
Given the volume of data to be transmitted, the master must ensure that there are data to be recovered and prepare the exchanges when necessary.
The identification zone, described below, is read by the reading of N words starting at the address 2204h/2404h:
- 2 reserve words forced to 0
- size of record configuration files encoded in 1 word
- size of record data files encoded in 2 words
- number of records encoded in 1 word
- date of record 1 (most recent) encoded in 4 words (see format below)
- date of record 2 encoded in 4 words (see format below)
- ...
- date of record 19 (least recent) encoded in 4 words (see format below)
- 28 reserve words.

All of these data are consecutive.

Reading the contents of the different files

Request frame
The master makes the request by writing the date of the record to be transferred (code 16) in 4 words starting at the address 2200h.
It should be noted that requesting a new record amounts to stopping the transfers that are in progress. This is not the case for an identification zone transfer request.

2200h/2400h

B15	B14	B13	B12	B11	B10	B09	B08	B07	B06	B05	B04	B03	B02	B01	B00
O	O	O	O	O	O	O	O	Y	Y	Y	Y	Y	Y	Y	Y
O	O	O	O	M	M	M	M	O	O	O	D	D	D	D	D
O	O	O	H	H	H	H	H	O	O	mn	mn	mn	mn	mn	mn
ms	ms	ms	ms	ms	ms	ms	ms	ms	ms	ms	ms	ms	ms	ms	ms

Y - 1 byte for years: varies from 0 to 99 years.
The remote monitoring and control system must ensure that the year 00 is greater than 99.
M - 1 byte for months: varies from 1 to 12.
D - 1 byte for days: varies from 1 to 31.
H - 1 byte for hours: varies from 0 to 23.
mn - 1 byte for minutes: varies from 0 to 59.
ms - 2 bytes for milliseconds: varies from 0 to 59999.

Reply frame
Reading of each portion of configuration and data file records by a 125-word read frame (code 2) starting at the address 2300h.

2300h/2500h

B15	B14	B13	B12	B11	B10	B09	B08	B07	B06	B05	B04	B03	B02	B01	B00
Exchange number								Number of usable bytes in the data zone							
.....															
Data zone															
.....															

Reading should always begin with the first word in the address zone (any other address triggers an exception reply "incorrect address").
The configuration and data files are read in their entirety in Sepam. They are transferred adjacently.

If the master requests more exchanges than necessary, the exchange number remains unchanged and the number of usable bytes is forced to 0. To guarantee data transfers, it is necessary to allow a response time of about 500 ms between each read operation at 2300h.
The first word transmitted is an exchange word. The exchange word comprises two fields:
■ the most significant byte contains the exchange number. It is initialized to zero after an energizing operation. It is incremented by 1 by Sepam each time a transfer takes place successfully. When it reaches the value FF, it automatically goes back to zero
■ the least significant byte contains the number of usable bytes in the data zone.
It is initialized to zero after an energizing operation and must be different from FFh.
The exchange word may also have the following values:
■ **xxyy**: the number of usable bytes in the data zone yy must be different from FFh
■ **0000h**: no "read requeste frame" has yet been formulated.
This is especially the case when Sepam is energized.
The other words are not significant.
■ **FFFFh**: the "request frameé has been processed, but the results in the reply zone are not yet available.
It is necessary to repeat "reply frame" reading.
The other words are not significant.
The words that follow the exchange word make up the data zone.
SInce the configuration and data files are adjacent, a frame may contain the edn of the configuration and the beginning of the data file of a record.
It is up to the remote monitoring and control system software to reconstruct the files in accordance with the transmitted number of usable bytes and the size of the files indicated in the identification zone.

Acknowledging a transfer

To inform Sepam that a record block that it has just read has been received correctly, the master must write the number of the last exchange that it has carried out in the "exchange number" field and set the "number of usable bytes in the data zone" of the exchange word to zero.
Sepam only increments the exchange number if new acquisition bursts are present.

Rereading the identification zone

To ensure that the record has not been modified, during its transfer by a new record, the master rereads the contents of the identification zone and ensures that the date of the recovered record is still present.

Contents

Equipment identification

Identification

Each Sepam comes in a single package which contains the base unit and base unit connector.
The other optional accessories such as modules, current or voltage input connectors and cords come in separate packages.
To identify a Sepam, check the 2 labels on the right side panel of the base unit which describe the product's functional and hardware features.

■ hardware reference and designation

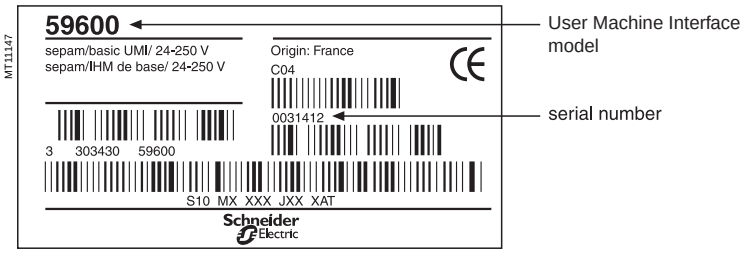

■ software reference and designation

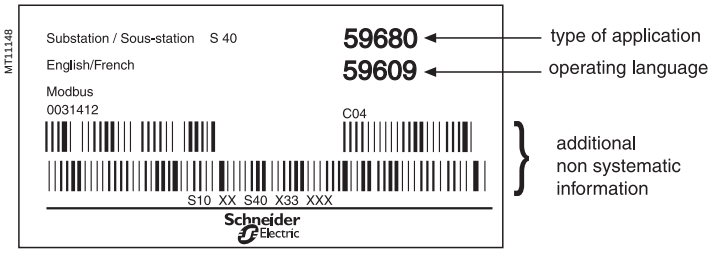

Identification of accessories

The accessories such as optional modules, current or voltage connectors and connection cords come in separate packages, identified by labels.

■ example of MES114 module identification label:

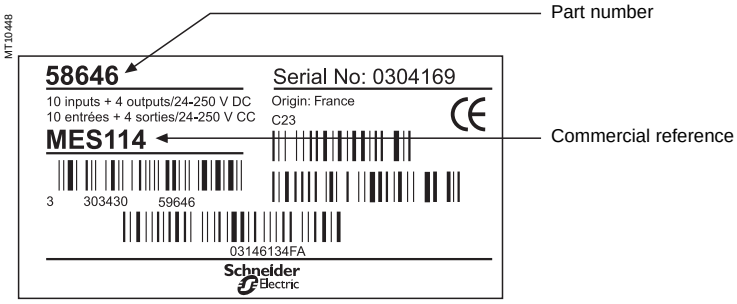

Equipment identification

List of Sepam series 40 references

Reference	Designation
59600	Base unit with basic UMI, 24-250 V DC and 100-240 V AC power supply
59604	Base unit with advanced UMI, 24-250 V DC and 100-240 V AC power supply
59608	DSM303, remote advanced UMI module
59615	Working language English/French
59616	Working language English/Spanish
59630	CCA630 connector for 1A/5A CT current sensors
59631	CCA670 connector for LPCT current sensors
59634	CSH30 interposing ring CT for I0 input
59635	CSH120 residual current sensor, diameter 120 mm
59636	CSH200 residual current sensor, diameter 200 mm
59641	MET148-2 8-temperature sensor module
59642	ACE949-2-wire RS 485 network interface
59643	ACE959 4-wire RS 485 network interface
59646	MES114 10 input + 4 output module / 24-250 V DC *
59647	MSA141 1 analog output module
59648	ACE909-2 RS 485/RS 232 convertor
59649	ACE919 AC RS 485/RS 485 interface (AC power supply)
59650	ACE919 DC RS 485/RS 485 interface (alimentation CC)
59656	CCA626 6-pin screw type connector
59657	CCA627 6-pin ring lug connector
59660	CCA770 remote module cord, L = 0.6 m
59661	CCA772 remote module cord, L = 2 m
59662	CCA774 remote module cord, L = 4 m
59663	CCA612 RS 485 network interface communication cord, L = 3 m
59664	CCA783 PC connection cord
59666	CCA613 remote LPCT test plug
59667	ACE917 LPCT injection adapter
59668	CCA620 20-pin screw type connector
59669	CCA622 20-pin ring lug connector
59670	AMT840 mounting plate
59671	SFT2841 PC configuration software kit, with CCA783 cord
59672	ACE990 core balance CT interface for I0 input
59676	Kit 2640 with 2 sets of spare connectors
59680	Substation application type S40
59681	Substation application type S41
59682	Substation application type S42
59683	Transformer application type T40
59684	Transformer application type T42
59685	Motor application type M41
59686	Generator application type G40

(*) Reference 59645 "MES108 4I/4O module" cancelled and replaced by reference 59646.

Precautions

Installation of Sepam

We recommend that you follow the instructions given in this document for quick, correct installation of your Sepam:

- equipment identification
- assembly
- connection of current and voltage inputs, probes
- connection of power supply
- checking prior to commissioning.

Handling, transport and storage

Sepam in its original packaging

Transport:
Sepam may be shipped to any destination without talking any additional precautions by all usual means of transport.

Handling:
Sepam may be handled without any particular care and can even withstand being dropped by a person handling it (person standing on floor).

Storage:
Sepam may be stored in its original packaging, in an appropriate location for several years:

- temperature between -25 °C and +70 °C
- humidity ⩽ 90 %.

Periodic, yearly checking of the environment and the packaging condition is recommended.
Once Sepam has been unpacked, it should be energized as soon as possible.

Sepam installed in a cubicle

Transport:
Sepam may be transported by all usual means of transport in the customary conditions used for cubicles. Storage conditions should be taken into consideration for a long period of transport.

Handling:
Should the Sepam fall out of a cubicle, check its condition by visual inspection and energizing.

Storage:
Keep the cubicle protection packing for as long as possible. Sepam, like all electronic units, should not be stored in a damp environment for more than a month. Sepam should be energized as quickly as possible. If this is not possible, the cubicle reheating system should be activated.

Environment of the installed Sepam

Operation in a damp environment
The temperature/relative humidity factors must compatible with the unit's environmental withstand characteristics.
If the use conditions are outside the normal zone, commissioning arrangements should be made, such as air conditioning of the premises.

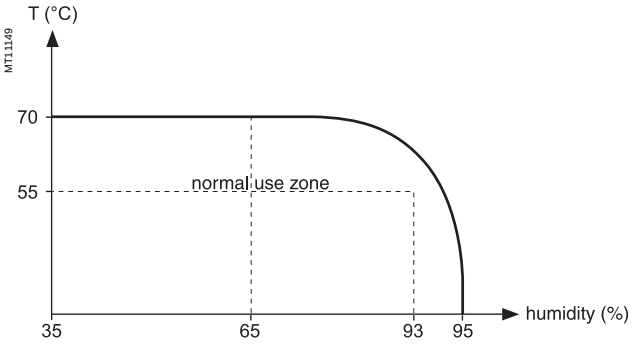

Operation in a polluted atmosphere
Sepam is designed to be used in a clean industrial environment as defined by IEC 60654-4 class 1. A contaminated industrial atmosphere components (such as the presence of chlorine, hydrofluoric acid, sulfur, solvents...) may cause corrosion of the electronic components, in which case environmental control arrangements should be made (such as closed, pressurized premises with filtered air, ...) for commissioning.

Base unit
Assembly

Mounting of the Sepam base unit

The Sepam is simply flush-mounted and clamped, without requiring any additional screw type fastening.

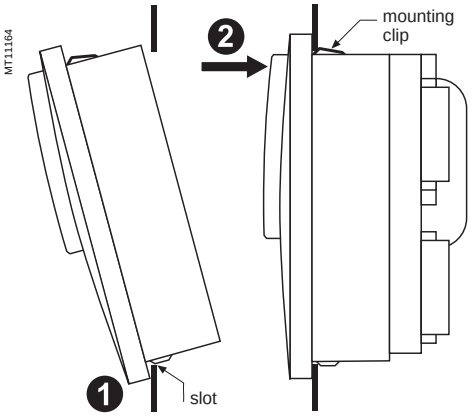

① Present the product as indicated, making sure the metal plate is correctly entered in the groove at the bottom.
② Tilt the product and press on the top part to clamp it with the clips.

Flush-mounting in front panel

Assembly shown with advanced UMI and optional MES114 module.
Weight = env. 1.9 kg (avec option)
Weight = env. 1.5 kg (sans option)

Top view

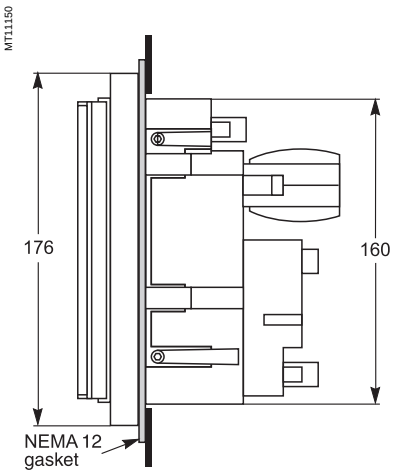

Side view

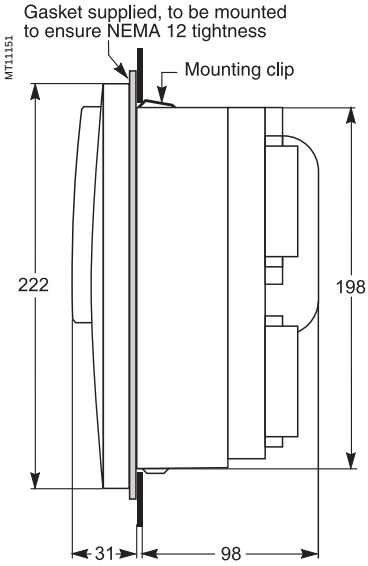

Cut-out

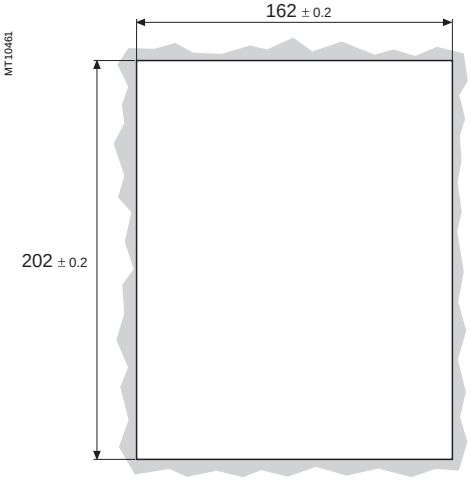

Mounting plate thickness < 3 mm.

Base unit
Assembly

"Terminal block" assembly with AMT840 plate

Used to mount Sepam with basic UMI at the back of the compartment with access to connectors on the rear panel.
Assembly associated with the use of the remote advanced UMI (DSM303).

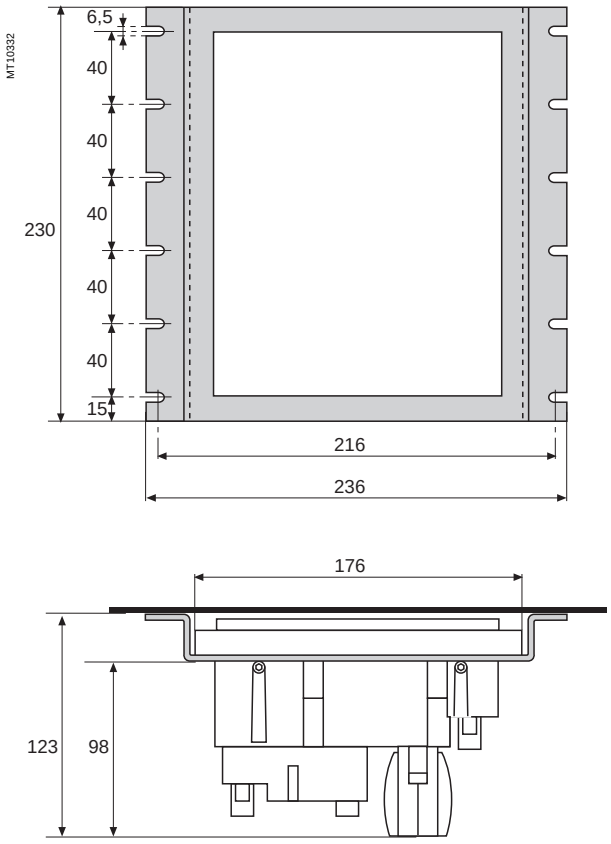

Base unit
Mounting of the remote advanced UMI DSM303

Mounting of the DSM303 module in the front panel

The module is simply flush-mounted and clamped, without requiring any additional screw type fastening.
The supplied seal must be mounted if a NEMA12 enclosure rating is required.

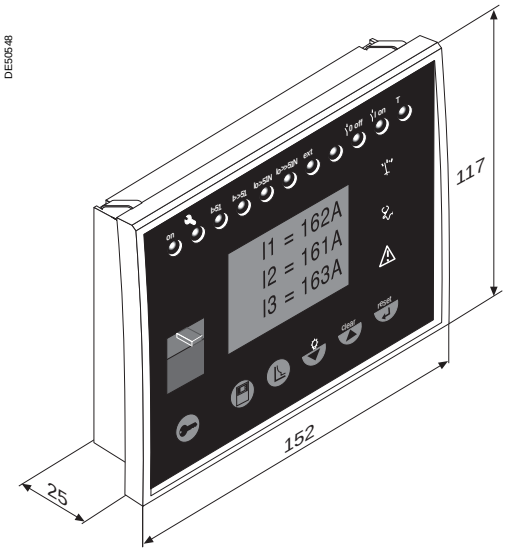

Weight approximately 0.3 kg.
The depth with the connection cable is less than 30 mm.

Cut-out

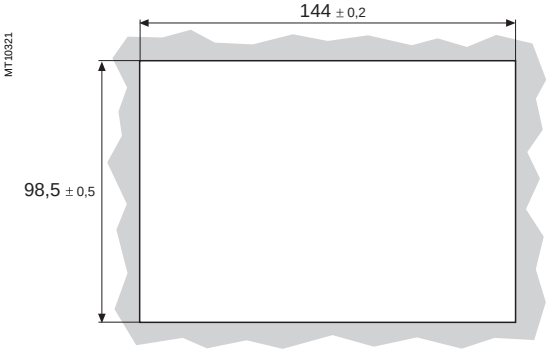

Cut-out dimensions for flush-mounting
(mounting plate thickness < 3 mm).

Side view

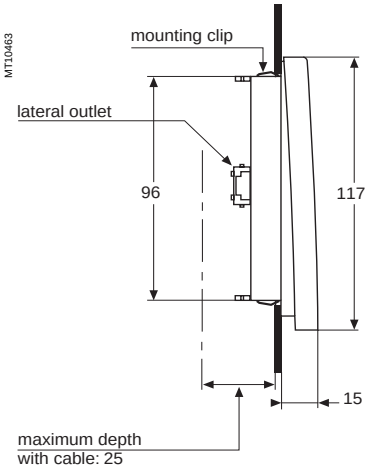

Base unit
Connection

Sepam components

■ base unit ①
□ Ⓐ base unit connector:
- power supply,
- output relay,
- CSH30, 120, 200 or ACE990 input.

Screw-type connector shown (CCA620), or ring lug connector (CCA622)
□ Ⓑ 1/5 CT A current input connector (CCA630) or LPCT current input connector (CCA670)
□ Ⓒ communication module link connection (green)
□ Ⓓ remote inter-module link connection (black)
□ Ⓔ voltage input connection, screw-type connector shown (CCA626) or ring lug connector (CCA627)
■ optional input/output module ② (MES114)
□ Ⓛ Ⓜ MES114 module connectors
□ Ⓚ MES114 module connector.

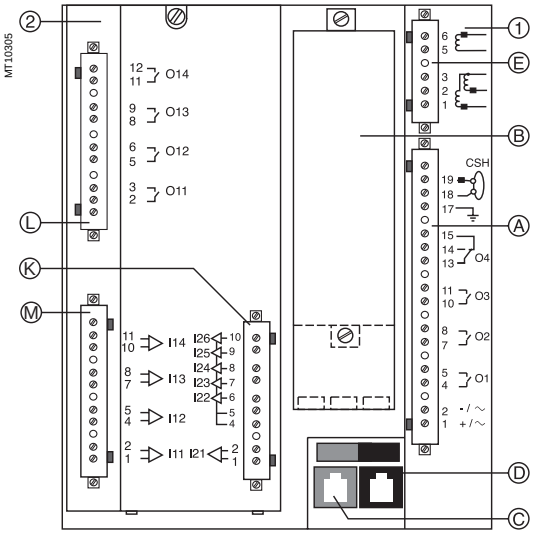

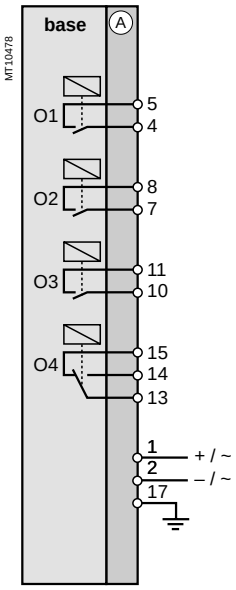

Connection of the base unit

The Sepam connections are made to the removable connectors located on the rear panel. All the connectors are screw-lockable.

For safety reasons (access to dangerous potentials), all the terminals must be screwed tight, whether or not they are used.

Wiring of the CCA620 and CCA626 connectors:
■ without fitting:
□ 1 wire with maximum cross-section of 0.2 to 2.5 mm^2 (⩾ AWG 24-12) or 2 wires with maximum cross-section of 0.2 to 1 mm^2 (⩾ AWG 24-16)
□ stripped length: 8 to 10 mm
■ with fitting:
□ recommended wiring with Telemecanique fitting:
- DZ5CE015D for 1 wire 1.5 mm^2
- DZ5CE025D for 1 wire 2.5 mm^2
- AZ5DE010D for 2 wires 1 mm^2

□ tube length: 8.2 mm
□ stripped length: 8 mm.

Wiring of the CCA622 and CCA627 connectors:
■ ring lug connectors 6.35 mm (1/4").

Characteristics of the 4 base unit relay outputs O1, O2, O3, O4.
■ O1 and O2 are 2 control outputs, used by the breaking device control function for:
□ O1: breaking device tripping
□ O2: breaking device closing inhibition
■ O3 and O4 are indication outputs, only O4 may be activated by the watchdog function.

Base unit
Connection of current input

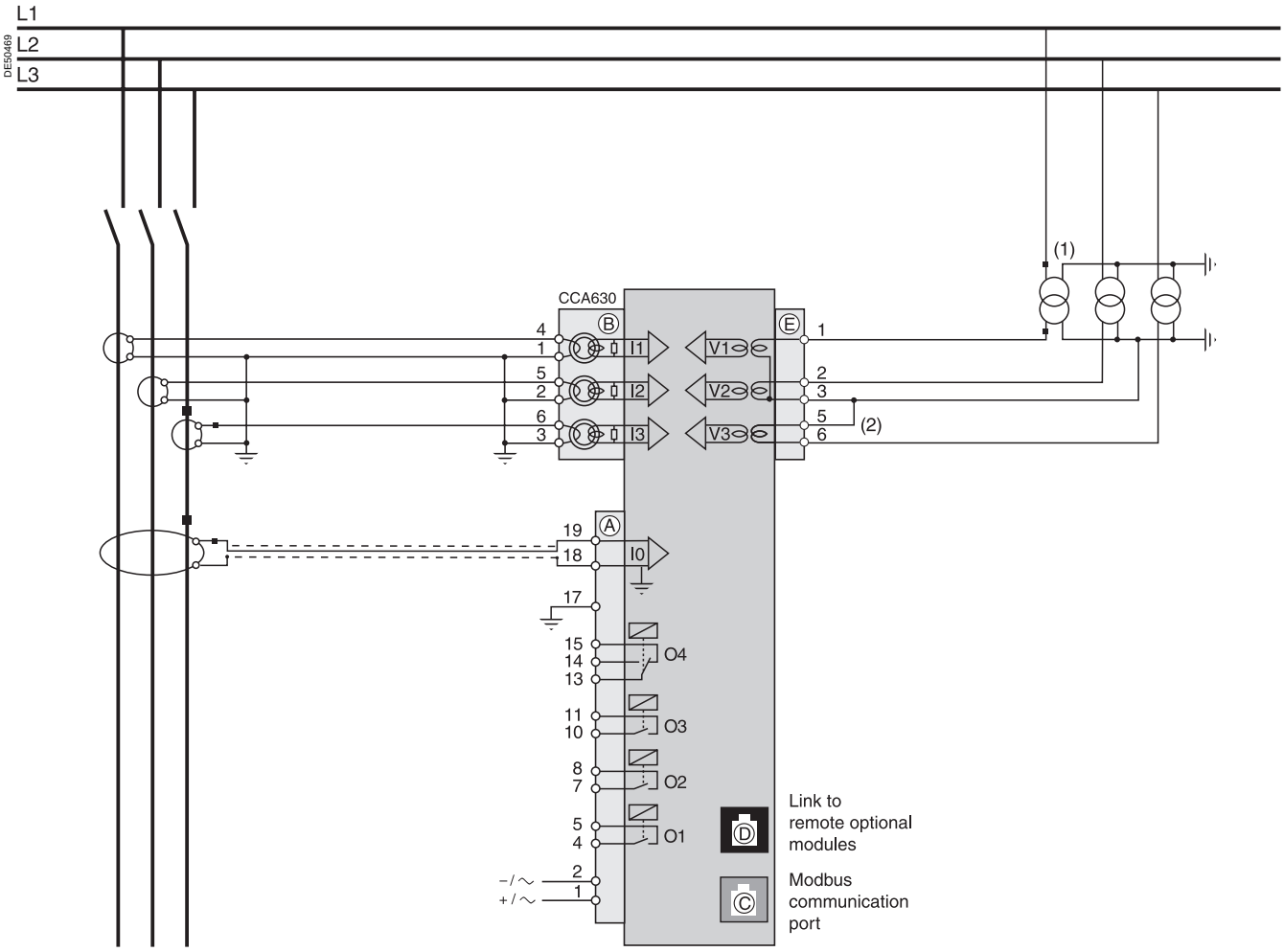

(1) *This type of connection allows the calculation of residual voltage.*
(2) *Accessory for bridging terminals 3 and 5 supplied with CCA626 connector.*

Base unit
Other phase current input connection schemes

Variant 1: phase current measurement by three 1 A or 5 A CTs (standard connection)

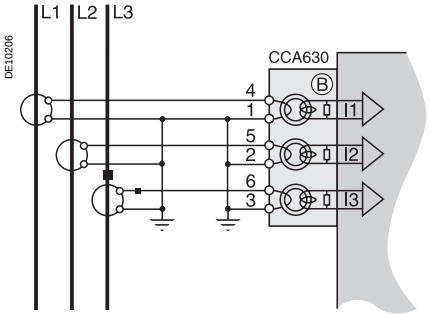

Connection of three 1 A or 5 A CTs to the CCA630 connector.

The measurement of the 3 phase currents allows the calculation of residual current.

Variant 2: phase current measurement by two 1 A or 5 A CTs

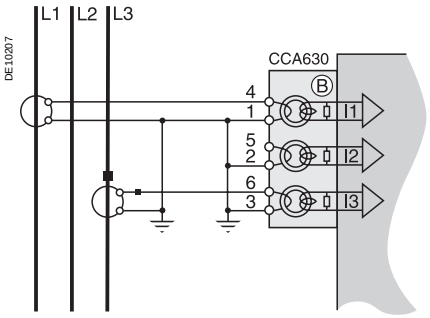

Connection of two 1 A or 5 A CTs to the CCA630 connector.

The measurement of phase currents 1 and 3 is sufficient to ensure all the current-based protection functions.

This arrangement does not allow the calculation of residual current.

Variant 3: phase current measurement by 3 LPCT type sensors

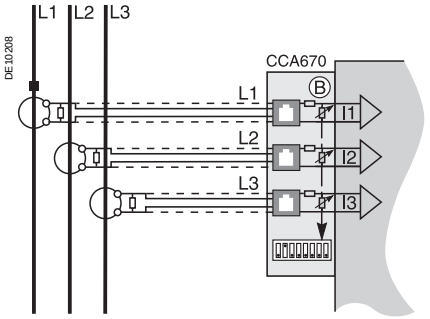

Connection of 3 Low Power Current Transducer (LPCT) type sensors to the CCA670 connector. The connection of just one or two sensors is not allowed and causes Sepam to switch to the fallback position.

The measurement of the 3 phase currents allows the calculation of residual current.

The In parameter, primary rated current measured by an LPCT, is to be chosen from the following values, in Amps: 25, 50, 100, 125, 133, 200, 250, 320, 400, 500, 630, 666, 1000, 1600, 2000, 3150.
Parameter to be set using the advanced UMI and the SFT2841 software tool, to be completed by hardware setting of the microswitches on the CCA670 connector.

Base unit
Other residual current input connection schemes

Variant 1: residual current calculation by sum of 3 phase currents

The residual current is obtained by taking the vector sum of the 3 phase currents I1, I2 and I3, measured by three 1 A or 5 A CTs or by three LPCT type sensors.
See current input connection diagrams.

Variant 2: residual current measurement by CSH120 or CSH200 core balance CT (standard connection)

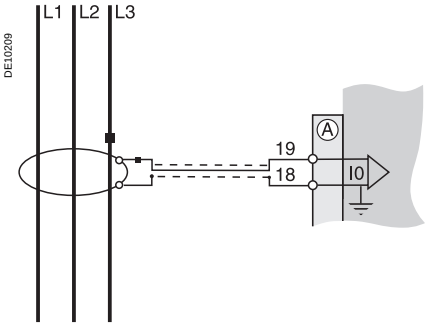

Arrangement recommended for the protection of isolated or compensated neutral systems in which very low fault currents need to be detected.

Setting range from 0.1 In0 to 15 In0, with In0 = 2 A or 5 A or 20 A according to parameter setting.

Variant 3: residual current measurement by 1 A or 5 A CT and CSH30 interposing ring CT

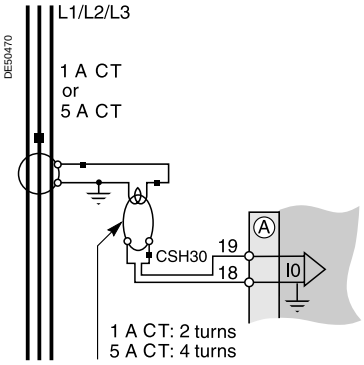

The CSH30 interposing ring CT is used to connect Sepam to 1 A or 5 A CTs to measure the residual current.

- connection of CSH30 interposing ring CT to 1 A CT: make 2 turns through the CSH primary winding
- connection of CSH30 interposing ring CT to 5 A CT: make 4 turns through the CSH primary winding
- the sensitivity can be multiplied by 10 by parameter setting of In0 = In/10.

Setting range from 0.1 In0 to 15 In0, or 0.01 In0 to 1.5 In0 with In = CT primary current.

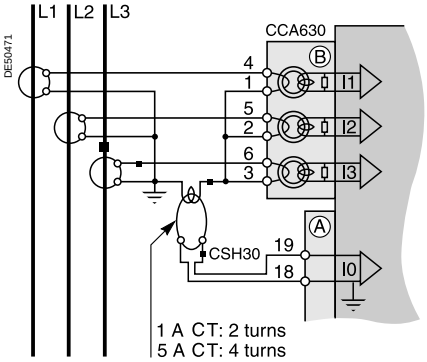

Variant 4: residual current measurement by core balance CT with ratio 1/n (n between 50 and 1500)

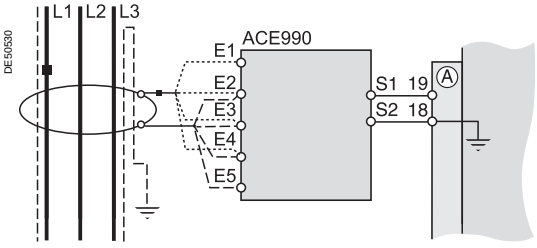

The ACE990 is used as an interface between a MV core balance CT with ratio 1/n (50 < n < 1500) and the Sepam residual current input.
This arrangement makes it possible to keep the existing core balance CTs in the installation.

Setting range from 0.1 In0 to 15 In0, with In0 = k.n,
with n = number of turns through core balance CT
and k = factor to be determined according to the wiring of the ACE990 and the parameter setting used by Sepam, among 20 discrete values from 0.00578 to 0.26316.

Base unit
Other voltage input connection schemes

The phase and residual voltage transformer secondary circuits are connected directly to the connector marked Ⓔ.
The 3 impedance matching and isolation transformers are integrated in the Sepam series 40 base unit.

Variant 1: measurement of 3 phase-to-neutral voltages (standard connection)

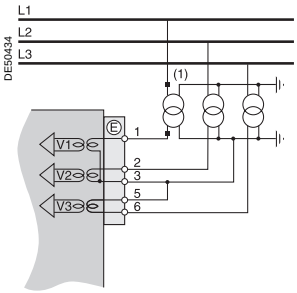

Phase voltage sensor parameter setting	3V
Residual voltage sensor parameter setting	3V sum
Voltages measured	V1, V2, V3
Values calculated	U21, U32, U13, V0, Vd, Vi, f
Measurements unavailable	None
Protection functions unavailable (according to type of Sepam)	None

Variant 2: measurement of 2 phase-to-phase voltages and residual voltage

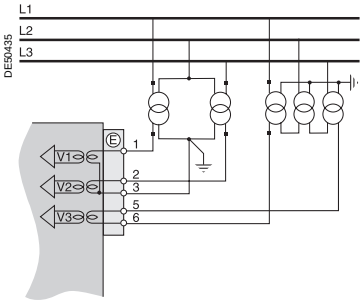

Phase voltage sensor parameter setting	U21, U32
Residual voltage sensor parameter setting	External VT
Voltages measured	U21, U32, V0
Values calculated	U13, V1, V2, V3, Vd, Vi, f
Measurements unavailable	None
Protection functions unavailable (according to type of Sepam)	None

Variant 3: measurement of 2 phase-to-phase voltages

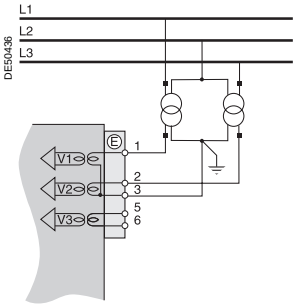

Phase voltage sensor parameter setting	U21, U32
Residual voltage sensor parameter setting	None
Voltages measured	U21, U32
Values calculated	U13, Vd, Vi, f
Measurements unavailable	V1, V2, V3, V0
Protection functions unavailable (according to type of Sepam)	67N/67NC, 59N

Variant 4: measurement of 1 phase-to-phase voltage and residual voltage

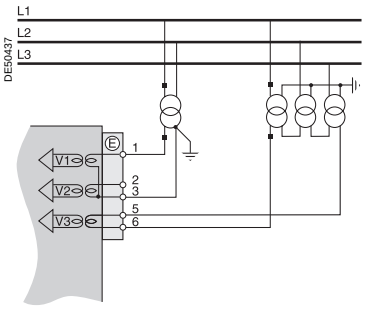

Phase voltage sensor parameter setting	U21
Residual voltage sensor parameter setting	External VT
Voltages measured	U21, V0
Values calculated	f
Measurements unavailable	U32, U13, V1, V2, V3, Vd, Vi
Protection functions unavailable (according to type of Sepam)	67, 47, 27D, 32P, 32Q/40, 27S

Variant 5: measurement of 1 phase-to-phase voltage

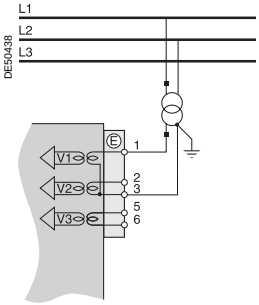

Phase voltage sensor parameter setting	U21
Residual voltage sensor parameter setting	None
Voltages measured	U21
Values calculated	f
Measurements unavailable	U32, U13, V1, V2, V3, V0, Vd, Vi
Protection functions unavailable (according to type of Sepam)	67, 47, 27D, 32P, 32Q/40, 67N/67NC, 59N, 27S

1 A or 5 A CT block and connection diagram

The current transformer (1 A or 5 A) secondary circuits are connected to the CCA630 connector, item Ⓑ.

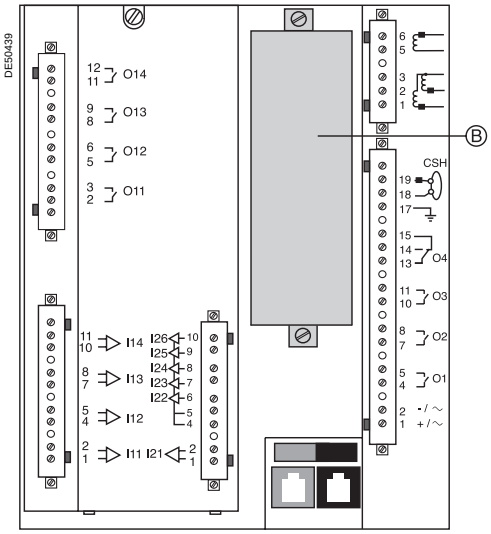

CCA630 connector

The connector contains 3 interposing ring CTs with through primaries, which ensure impedance matching and isolation between the 1 A or 5 A circuits and Sepam.
The connector may be disconnected with the power on since disconnection does not open the CT secondary circuits.

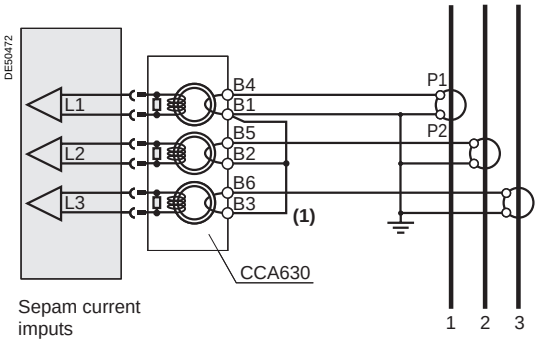

***(1)** Bridging strap supplied with the CCA630.*

CCA630 wiring

- open the 2 side shields for access to the connection terminals. The shields may be removed, if necessary, to make wiring easier. If removed, they must be replaced after wiring
- remove the bridging strap, if necessary. The strap links terminals 1, 2 and 3
- connect the wires using 3 mm ring lugs.

The connector accommodates wires with cross-sections of 1.5 to 6 mm^2 (AWG 16 to AWG 10)

- close the side shields
- plug the connector into the 9-pin inlet on the rear panel, item Ⓑ
- tighten the 2 CCA630 connector fastening screws on the rear panel of Sepam.

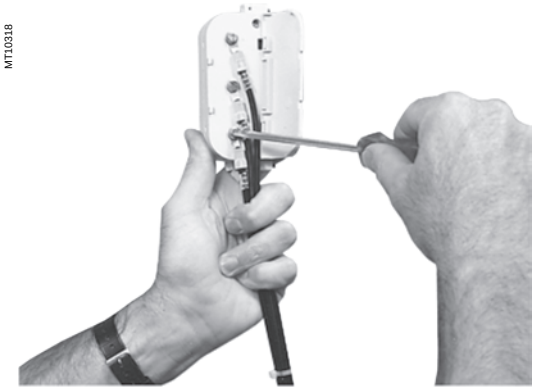

LPCT type current sensors

LPCT sensor block and connection diagram

The 3 LPCT current transformers (CLP1 sensor equipped with a 5 m standard cable) are connected to the CCA670 connector mounted in the rear panel of Sepam, item Ⓑ.

The connection of only one or two LPCT sensors is not allowed and causes Sepam to go into the failsafe position.

CCA670 connector parameter setting

The CCA670 connector should be calibrated at the time of Sepam commissioning according to the following instructions:

■ use a screwdriver to remove the shield located in the "LPCT settings" zone; the shield protects 3 blocks of 8 microswitches marked L1, L2, L3

■ on the L1 block, set the microswitch that corresponds to the selected rated current to "1" (2 ratings possible for each position)

□ the rated current should be the same as the one set in Sepam ("General characteristics" menu via the SFT2841 software tool, "Current sensors" screen with advanced UMI)

□ leave the 7 other microswitches set to "0"

■ set the other 2 blocks of switches L2 and L3 to the same position as block L1 and close the shield.

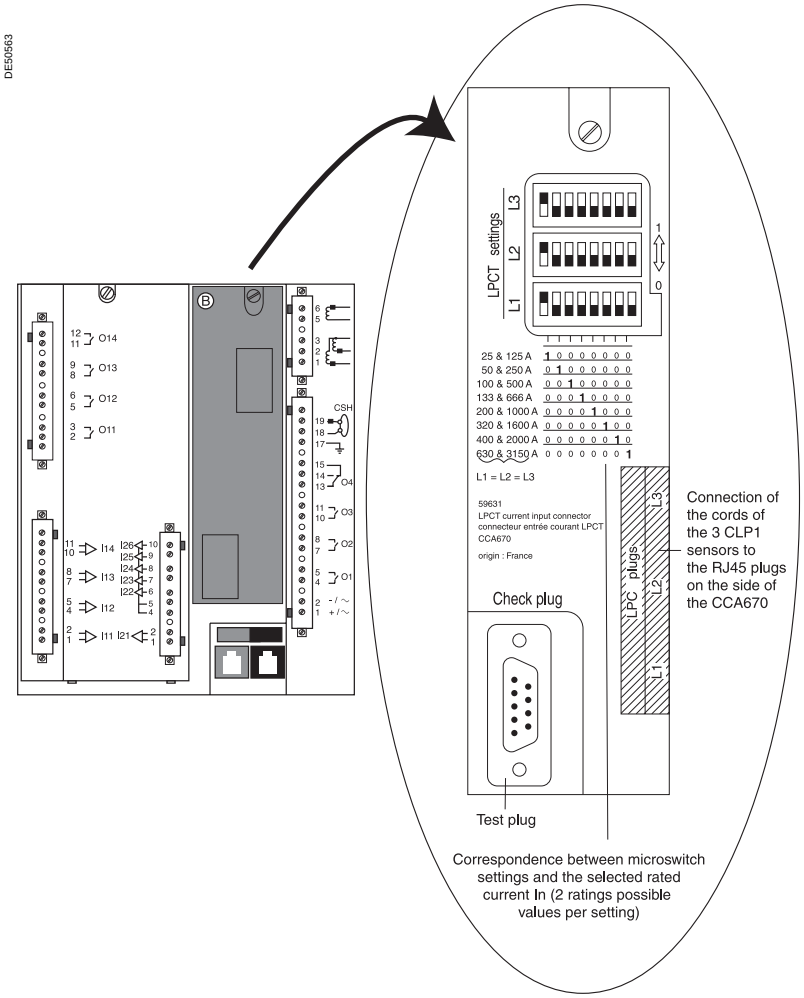

CCA613 remote test plug

The CCA613 test plug, panel-mounted on the front of the cubicle and fitted with a 3-meter cord, is used to transfer data from the integrated test plug to the CCA670 interface connector on the rear panel of Sepam.

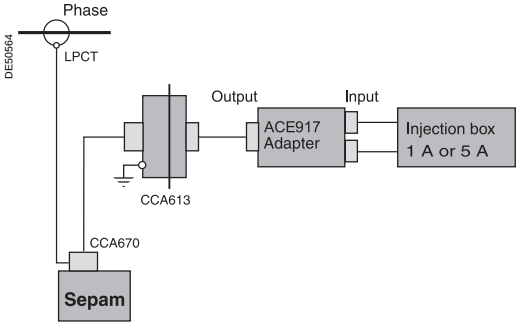

Accessory connection principle.

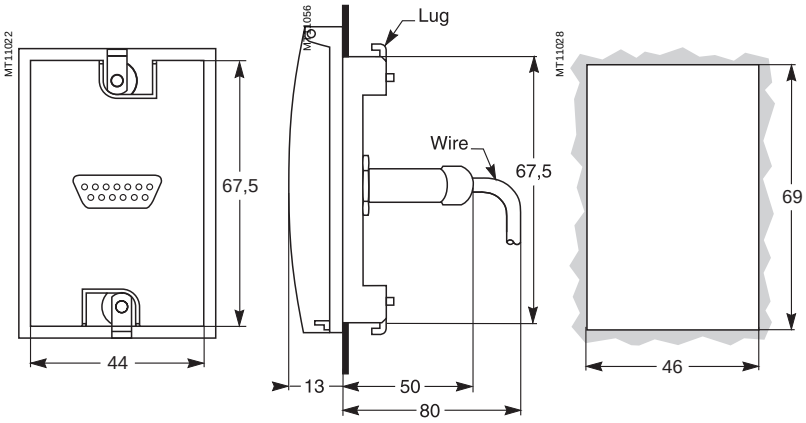

Front view with cover lifted. *Right side view.* *Cutout.*

Core balance CTs CSH120 and CSH200

Use of CSH120 and CSH200 core balance CTs

The only difference between the CSH120 and CSH200 core balance CTs is their inner diameter (120 mm and 200 mm).
Due to their low voltage isolation, they may only be used on cables.

MT10315

CSH120 and CSH200 connection diagram

MT10466

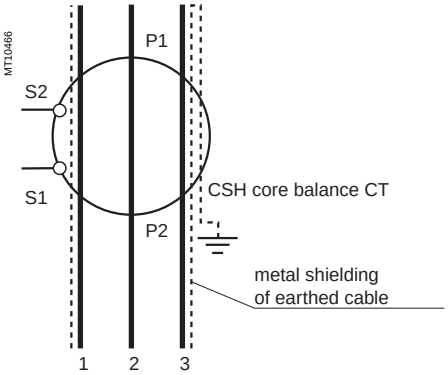

Cable shield earthing.

MT10328

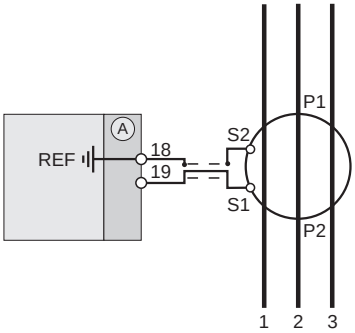

Assembly

E40465

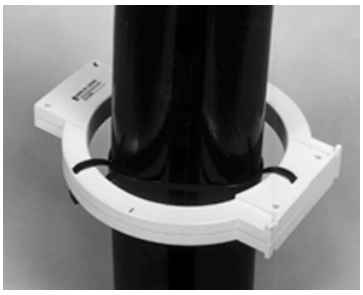

Assembly on MV cables.

E40466

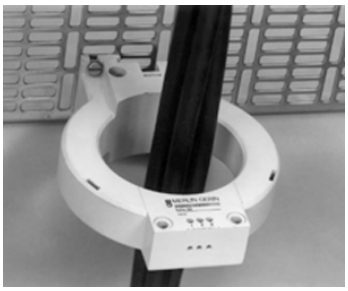

Assembly on mounting plate.

Group the MV cable (or cables) in the middle of the core balance CT.
Use non-conductive binding to hold the cable.
Remember to insert the 3 medium voltage cable shielding earthing cables through the core balance CT.

MT10339

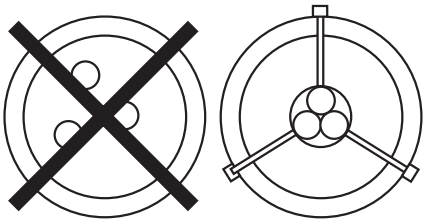

Wiring

The CSH120 or CSH200 core balance CT is connected to Sepam's 20-pin connector (item Ⓐ).
Recommended cable:
- sheathed cable, shielded by tined copper braid
- min. cable cross-section 0.93 mm^2 (AWG 18)
- resistance per unit length < 100 milli ohms/m
- min. dielectric strength: 1000 V.

Connect the connector cable shielding in the shortest manner possible to terminal 18 on Sepam.
Flatten the connection cable against the metal frames of the cubicle.
The connection cable shielding is grounded in Sepam. Do not ground the cable by any other means.

The maximum resistance of the Sepam connection wiring must not be more than 4 Ω.

Dimensions

MT10467

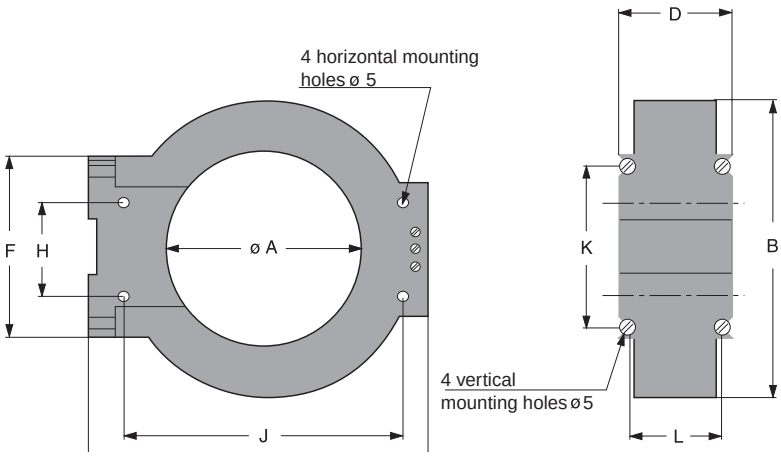

Dimensions (mm)									Weight
CSH 120									0.6 kg
A	**B**	**D**	**E**	**F**	**H**	**J**	**K**	**L**	
120	164	44	190	76	40	166	62	35	
CSH 200									1.4 kg
200	256	46	274	120	60	257	104	37	

CSH30 interposing ring CT

Use of CSH30 interposing ring CT

The CSH30 interposing ring CT should be used when residual current is measured by a current transformer with a secondary circuit (1 A or 5 A). It acts as an interface between the current transformer and the Sepam residual current input.
The CSH30 interposing ring CT is mounted on a symmetrical DIN rail. It may also be mounted on a plate by means of the mounting holes in its base.

Connection diagram

The CSH30 is made to adapt to the type of 1 A or 5 A current transformer by the number of turns of the secondary wiring in the CSH30 interposing ring CT:
- 5 A rating CT - 4 turns
- 1 A rating CT - 2 turns.

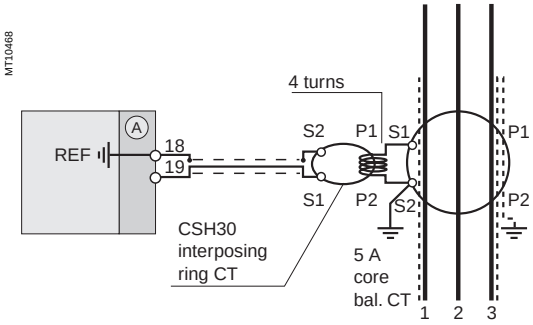

Example with 5 A CT.

Assembly

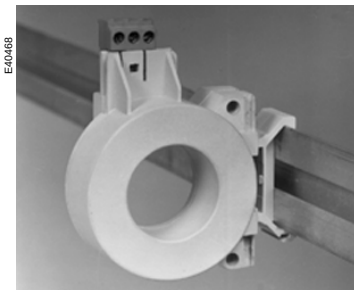

Vertical assembly.

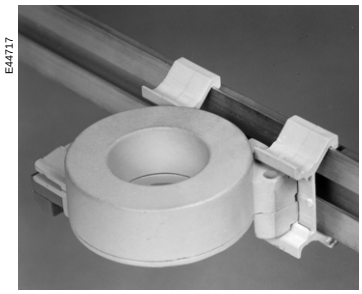

Horizonal assembly.

Wiring

The secondary winding of the CSH30 is connected to the connector, item Ⓐ.
Cable to be used:
- sheathed cable, shielded by tined copper braid
- min. cable cross-section 0.93 mm² (AWG 18) (max. 2.5 mm²)
- resistance per unit length < 100 mΩ/m
- min. dielectric strength: 1000 V.

It is essential for the CSH30 interposing ring CT to be installed near Sepam (Sepam CSH30 link less than 2 m).
Flatten the cable against the metal frames of the cubicle.
The connection cable shielding is grounded in Sepam.
Do not ground the cable by any other means.

Connection to 5 A secondary circuit

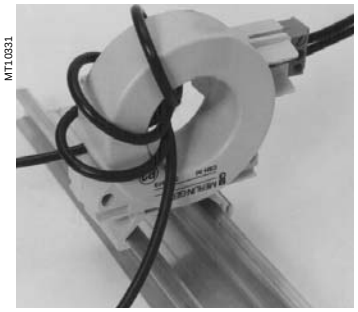

- plug into the connector
- insert the transformer secondary wire through the CSH30 interposing ring CT 4 times.

Connection to 1 A secondary circuit

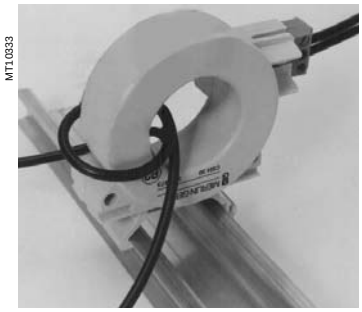

- effectuer le raccordement sur le connecteur
- passer le fil du secondaire du transformateur 2 fois dans le tore CSH30.

Dimensions

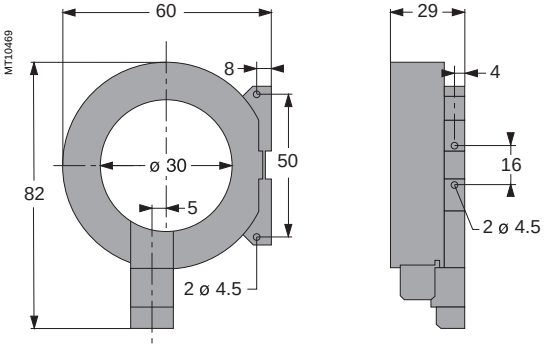

Weight: 0.12 kg.

ACE990 interface

Use of ACE990 interface

The ACE990 is used to match the measurement of a MV core balance CT with ratio 1/n (50 ⩽ n ⩽ 1500) with that of the Sepam residual current input.
So as not to downgrade measurement accuracy, the MV core balance CT must be able to supply sufficient power. The value is given in the table opposite.

Use

To wire the ACE 990 interface correctly, it is necessary to know the following:
- ratio of the core balance CT (1/n)
- core balance CT power
- close approximation of the rated current In0 (1).

The table opposite may be used to determine the possible choices for the connection of the ACE990 interface primary circuit to the Sepam residual current input, as well as the rated residual current setting In0.
The exact value of the rated current In0 (1) to be set is given by the following formula:
In0 = k x number of core balance CT turns
with k the factor defined in the table opposite.

Example:
The core balance CT used has a ratio of 1/400, 2 VA.
If the current being monitored is between 0.5 A and 60 A, a close approximation of the rated current In0 may be 5 A.
This value may be used to accurately measure from 0.5 A to 75 A.

Calculate the ratio : $\frac{\text{approx. In0}}{\text{number of turns}}$

In the table opposite, find the closest value of k.
5/400 = 0.0125 close value k = 0.01136.
It correspoinds to core balance CTs with more than 0.1 VA of power.

The In0 value to be set is:
In0 = 0.01136 x 400 = 4.5 A

This In0 value may be used to monitor a current between 0.45 A and 67.5 A.

The secondary circuit of the MV core balance CT is wired to ACE990 terminals I2 and I4.

Characteristics
- accuracy:
amplitude: ±1 %
phase: < 2°
- maximum permissible current: 20 kA 1 s (on primary of MV core balance CT with ratio 1/50 that does not saturate)
- operating temperature: -5 °C +55 °C
- storage temperature: -25 °C +70 °C.

(1) Current value for which the required setting range extends to between 10 % and 1500 % of this value, at the most.
(2) Parameter setting and adjustment of In0 current as a multiple of 0.1 A may be accessed from the SFT2841 software tool or from the advanced UMI (general characteristics).

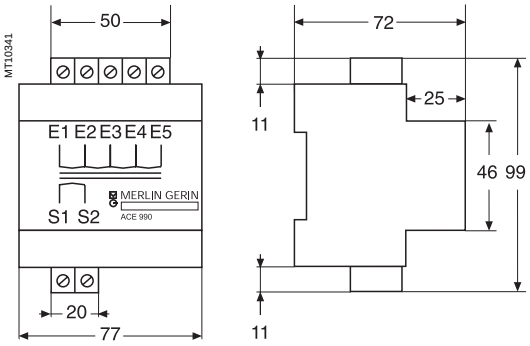

Mounted on symmetrical DIN rail, weight 640 g.

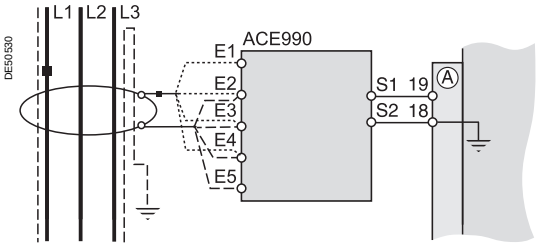

Value of k	ACE990 input	Choice of Sepam residual current (2)	Min. MV core bal. CT power
0.00578	E1 – E5	ACE990 - range 1	0.1 VA
0.00676	E2 – E5	ACE990 - range 1	0.1 VA
0.00885	E1 – E4	ACE990 - range 1	0.1 VA
0.00909	E3 – E5	ACE990 - range 1	0.1 VA
0.01136	**E2 – E4**	**ACE990 - range 1**	**0.1 VA**
0.01587	E1 – E3	ACE990 - range 1	0.1 VA
0.01667	E4 – E5	ACE990 - range 1	0.1 VA
0.02000	E3 – E4	ACE990 - range 1	0.1 VA
0.02632	E2 – E3	ACE990 - range 1	0.1 VA
0.04000	E1 – E2	ACE990 - range 1	0.2 VA
0.05780	E1 – E5	ACE990 - range 2	2.5 VA
0.06757	E2 – E5	ACE990 - range 2	2.5 VA
0.08850	E1 – E4	ACE990 - range 2	3.0 VA
0.09091	E3 – E5	ACE990 - range 2	3.0 VA
0.11364	E2 – E4	ACE990 - range 2	3.0 VA
0.15873	E1 – E3	ACE990 - range 2	4.5 VA
0.16667	E4 – E5	ACE990 - range 2	4.5 VA
0.20000	E3 – E4	ACE990 - range 2	5.5 VA
0.26316	E2 – E3	ACE990 - range 2	7.5 VA

Wiring

Only one core balance CT may be connected to the ACE990 interface.
The secondary circuit of the MV core balance CT is connected to 2 of the 5 ACE990 interface inputs. The core balance CT must be connected to the interface in the right direction for correct operation, in particular S1 on the MV core balance CT must be connected to the terminal with the lowest index (Ex).
Cables to be used:
- cable between the core balance CT and the ACE990: length less than 50 m
- sheathed cable, shielded by tined copper braid between the ACE990 and Sepam: maximum length 2 m
- cable cross-section between 0.93 mm² (AWG 18) and 2.5 mm² (AWG 13)
- resistance per unit length less than 100 mΩ/m
- minimum dielectric strength: 100 V.

Connect the ACE990 connection cable shielding in the shortest manner possible (maximum 2 cm) to pin 18 of the connector Ⓐ.
Flatten the cable against the metal frames of the cubicle. The connection cable shielding is grounded in Sepam.
Do not ground the cable by any other means.

Voltage transformers

The phase and residual voltage transformer secondary circuits are connected to the connector item Ⓔ.

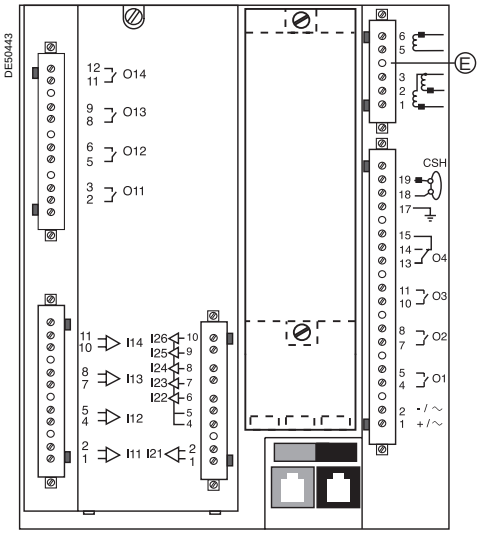

Connections

The connections are made to the removable 6-pin screw type (CCA626) or ring lug type (CCA627) connectors located on the rear panel.

Wiring of CCA626 connector:

■ without fitting:

□ 1 wire with maximum cross-section of 0.2 to 2.5 mm^2 (⩾ AWG 24-12) or 2 wires with maximum cross-section of 0.2 to 1 mm^2 (⩾ AWG 24-16)

□ stripped length: 8 to 10 mm

■ with fitting:

□ recommended wiring with Telemecanique fitting:

- DZ5CE015D for 1 wire 1.5 mm^2
- DZ5CE025D for 1 wire 2.5 mm^2
- AZ5DE010D for 2 wires 1 mm^2

□ tube length: 8.2 mm

□ stripped length: 8 mm.

Wiring of CCA627 connector:

■ ring lug connectors 6.35 mm (1/4").

MES114 modules

Function

The 4 outputs included on the Sepam may be extended by adding an optional MES114 module with 10 inputs and 4 outputs, available in 3 versions:

- MES114: 10 DC inputs voltage from from 24 V DC to 250 V DC
- MES114E: 10 inputs, voltage 110-125 V AC or V DC
- MES114F: 10 inputs, voltage 220-250 V AC or V DC

The assignment of the inputs and outputs may be set up on the advanced UMI or using the SFT2841 software tool.

Characteristics

MES114 module					
Weight	0.28 kg				
Logical inputs	**MES114**	**MES114E**		**MES114F**	
Voltage	24 to 250 V DC	110 to 125 V DC	110 V AC	220 to 250 V DC	220 to 240 V AC
Range	19.2 to 275 V DC	88 to 150 VV DC	88 to 132 V AC	176 to 275 V DC	176 to 264 V AC
Frequency	/	/	47 to 63 Hz	/	47 to 63 Hz
Typical consumption	3 mA	3 mA	3 mA	3 mA	3 mA
Typical switching threshold	14 V DC	82 V DC	58 V AC	154 V DC	120 V AC
O11 control relay output					
Voltage	Dc	24 / 48 V DC	127 V DC	220 V DC	
	Ac (47.5 to 63 Hz)				100 to 240 V AC
Continuous current		8 A	8 A	8 A	8 A
Breaking capacity	Resistive load	8 / 4 A	0.7 A	0.3 A	8 A
	Load L/R < 20 ms	6 / 2 A	0.5 A	0.2 A	
	Load L/R < 40 ms	4 / 1 A	0.2 A	0.1 A	
	Load cos φ > 0.3				5 A
Making capacity		< 15 A for 200 ms			
O12 to O14 indication relay output					
Voltage	Dc	24 / 48 V DC	127 V DC	220 V DC	
	Ac (47.5 to 63 Hz)				100 to 240 V AC
Continuous current		2 A	2 A	2 A	2 A
Breaking capacity	Load L/R < 20 ms	2 / 1 A	0.5 A	0.15 A	
	Load cos φ > 0.3				1 A
Making capacity		< 15 A for 200 ms			

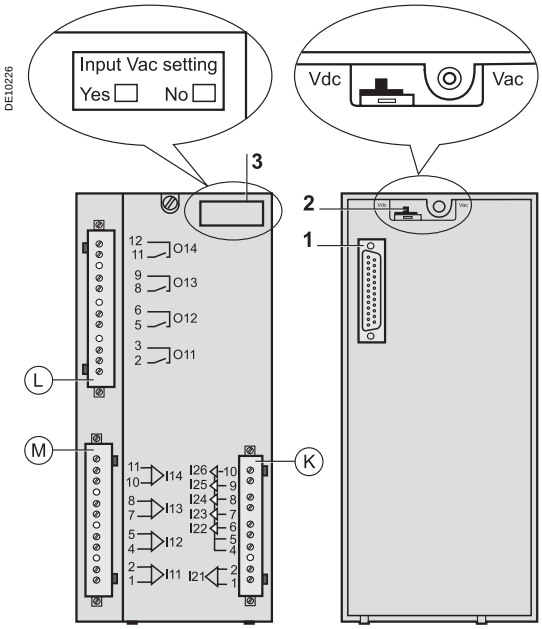

Description

Ⓛ, Ⓜ and Ⓚ: 3 removable, lockable screw-type connectors.
Ⓛ: connectors for 4 relay outputs:

- O11: 1 control relay output
- O12 to O14: 3 indication relay outputs.

Ⓜ: connectors for 4 independent logic inputs I11 to I14
Ⓚ: connectors for 6 logic inputs:

- I21: 1 independent logic input
- I22 to I26: 5 common point logic inputs.

1: 25-pin sub-D connector to connect the module to the base unit
2: voltage selector switche for MES114E and MES114F module inputs, to be set to:
□ V DC for 10 DC voltage inputs (default setting)
□ V AC for 10 AC voltage inputs.
3 : label to be filled in to indicate the chosen parameter setting for MES114E and MES114F input voltages.

The parameter setting status may be accessed in the "Sepam Diagnosis" screen of the SFT2841 software tool.
Parameter setting of the inputs for AC voltage (V AC setting) inhibits the "operating time measurement" function.

MES114 modules

Assembly

- insert the 2 pins on the MES module into the slots 1 on the base unit
- flatten the module up against the base unit to plug it into the connector 2
- tighten the 3 mounting screws.

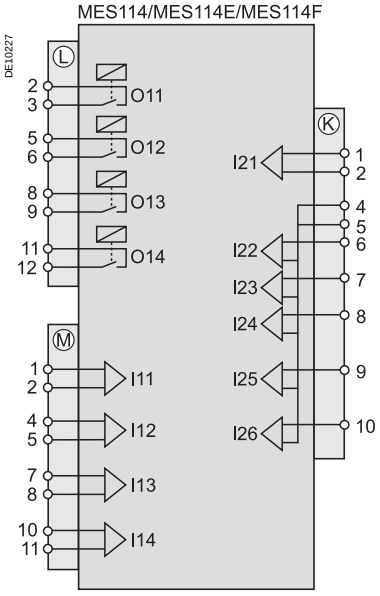

Connection

For safety reasons (access to dangerous voltages), all terminals must be screwed tight, whether or not they are used.
The inputs are potential-free and the DC power supply source is external.

Wiring of connectors Ⓛ, Ⓜ and Ⓚ:
- wiring without fitting:
  - 1 wire with maximum cross-section 0.2 to 2.5 mm² (> AWG 24-12)
  - or 2 wires with maximum cross-section 0.2 to 1 mm² (> AWG 24-16)
  - stripped length: 8 to 10 mm
- wiring with fittings:
  - recommended wiring with Telemecanique fitting:
    - DZ5CE015D for one 1.5 mm² wire
    - DZ5CE025D for one 2.5 mm² wire
    - AZ5DE010D for two 1 mm² wires
  - tube length: 8.2 mm
  - stripped length: 8 mm.

Optional remote modules
Connection

The optional MET148-2, MSA141 or DSM303 modules are connected to the base unit connector Ⓓ by a series of links using prefabricated cords which come in 3 different lengths with black fittings.

- CCA770 (L = 0.6 m)
- CCA772 (L = 2 m)
- CCA774 (L = 4 m).

The DSM303 module may only be connected at the end of the series.

Maximum configuration

A maximum of three modules may be connected to the base unit, in compliance with the module order and maximum connection lengths indicated in the table:

Base	Cord	Module 1	Cord	Module 2	Cord	Module 3
DE50089 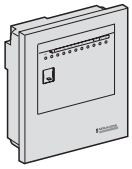		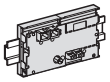		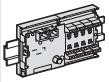		
	CCA772	MSA141	CCA770	MET148-2	CCA774	DSM303
	CCA772	MSA141	CCA770	MET148-2	CCA772	MET148-2
	CCA772	MET148-2	CCA770	MET148-2	CCA774	DSM303

DE50656

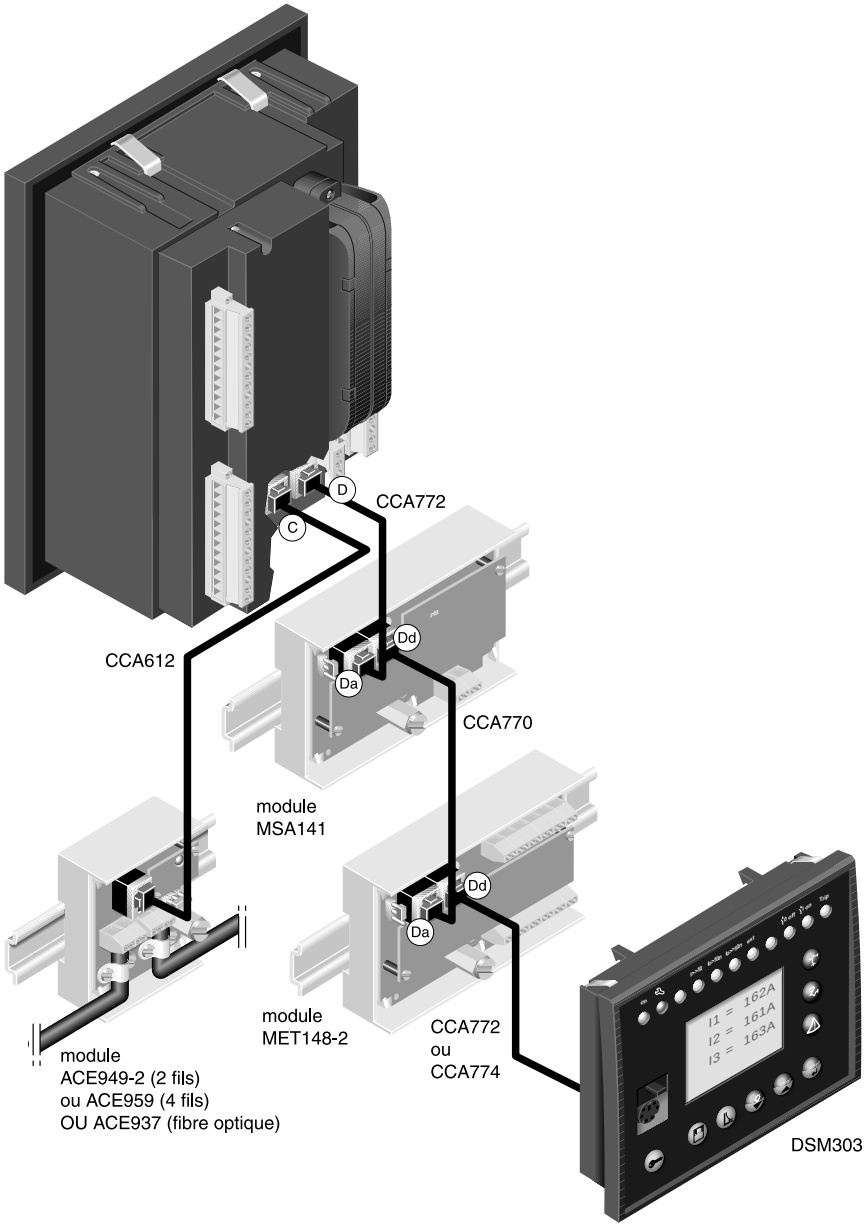

Temperature sensor modules MET148-2

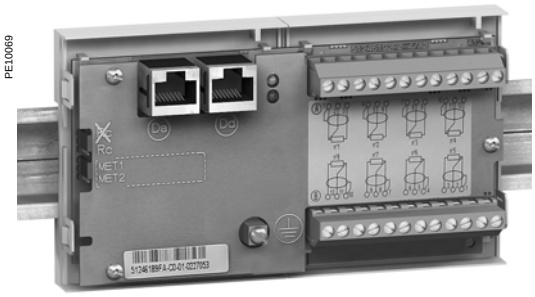

MET148-2 temperature sensor module.

Function

The MET148-2 module may be used to connect 8 temperature sensors (RTDs) of the same type:
- Pt100, Ni100 or Ni120 type RTDs, according to parameter setting
- 3-wire temperature sensors
- 2 modules for each Sepam, to be connected by one of the CCA770, CCA772 or CCA774 cords (0.6 or 2 or 4 meters))

The temperature measurement (e.g. in a transformer or motor winding) is utilized by the following protection functions:
- thermal overload (to take ambient termperature into account)
- temperature monitoring.

Characteristics

MET148-2 module		
Weight	0.2 kg	
Assembly	On symmetrical DIN rail	
Operating temperature	-25 °C to +70 °C	
Environmental characteristics	Same characteristics as Sepam base units	
RTDs	**Pt100**	**Ni100 / Ni120**
Isolation from earth	None	None
Current injected in RTD	4 mA	4 mA

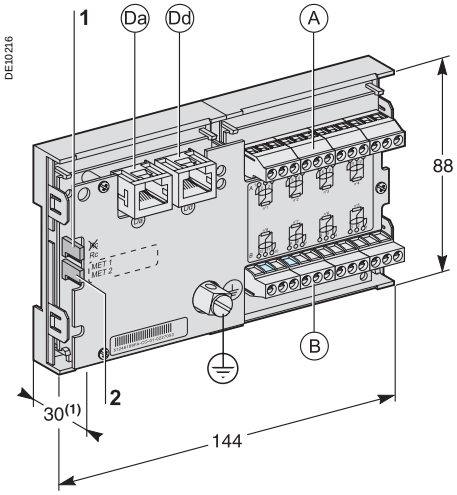

***(1)** 70 mm with CCA77x cord connected.*

Description and dimensions

(A) Terminal block for RTDs 1 to 4.

(B) Terminal block for RTDs 5 to 8.

(Da) RJ45 connector to connect the module to the base unit with a CCA77x cord.

(Dd) RJ45 connector to link up the next remote module with a CCA77x cord (according to application).

(⏚) Grounding/earthing terminal.

1 Jumper for impedance matching with load resistor (Rc), to be set to:
- ~~Rc~~, if the module is not the last interlinked module (default position)
- Rc, if the module is the last interlinked module.

2 Jumper used to select module number, to be set to:
- MET1: 1st MET148-2 module, to measure temperatures T1 to T8 (default position).
- MET2: 2d MET148-2 module, to measure temperatures T9 to T16.

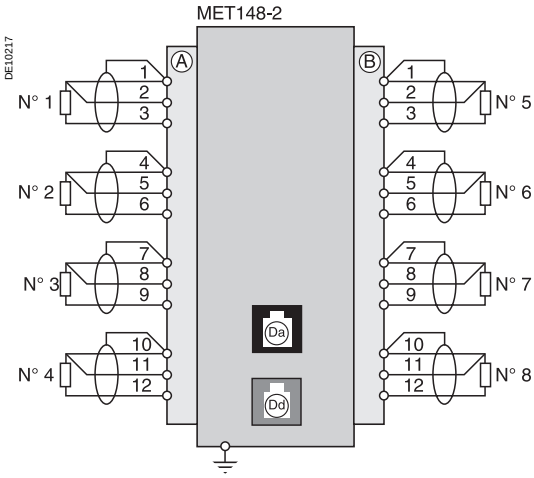

Connection

Connection of the earthing terminal

By tinned copper braid or cable fitted with a 4 mm ring lug.

Connection of RTDs to screw-type connectors
- 1 wire with cross-section 0.2 to 2.5 mm² (⩾ AWG 24-12)
- or 2 wires with cross-section 0.2 to 1 mm² (⩾ AWG 24-16).

Recommended cross-sections according to distance:
- up to 100 m ⩾ 1 mm², AWG 16
- up to 300 m ⩾ 1.5 mm², AWG 14
- up to 1 km ⩾ 2.5 mm², AWG 12.

Wriring precautions
- it is preferable to use shielded cables

The use of unshielded cables may cause measurement errors, which vary in degree on the level of surrounding electromagnetic disturbance
- only connect the shielding at the MET148-2 end, in the shortest manner possible, to the corresponding terminals of connectors (A) and (B)
- do not connect the shielding at the RTD end.

Accuracy derating according to wiring

The error Δt is proportional to the length of the cable and inversely proportional to the cable cross-section:

$$\Delta t(°C) = 2 \times \frac{L(km)}{S(mm^2)}$$

- ±2.1 °C/km for 0.93 mm² cross-section
- ±1 °C/km for 1.92 mm² cross-section.

Analog output module MSA141

MSA141 analog output module.

Function

The MSA141 module converts one of the Sepam measurements into an analog signal:

- ■ selection of the measurement to be converted by parameter setting
- ■ 0-10 mA, 4-20 mA, 0-20 mA analog signal according to parameter setting
- ■ scaling of the analog signal by setting minimum and maximum values of the converted measurement.

Example: the setting used to have phase current 1 as a 0-10 mA analog output with a dynamic range of 0 to 300 A is:

- □ minimum value = 0
- □ maximum value = 3000

■ a single module for each Sepam base unit, to be connected by one of the CCA770, CCA772 or CCA774 cords (0.6 or 2 or 4 meters).

The analog output may also be remotely managed via the Modbus communication network.

Characteristics

MSA141 module		
Weight	0.2 kg	
Assembly	On symmetrical DIN rail	
Operating temperature	-25°C to +70°C	
Environmental characteristics	Same characteristics as Sepam base unit	
Analog output		
Current	4-20 mA, 0-20 mA, 0-10 mA	
Scaling (no data input checking)	Minimum value	
	Maximum value	
Load impedance	< 600 Ω (wiring included)	
Accuracy	0.5 %	
Measurements available	**Unit**	**Series 40**
Phase and residual currents	0.1 A	■
Phase-to-neutral and phase-to-phase voltages	1 V	■
Frequency	0.01 Hz	■
Thermal capacity used	1%	■
Temperatures	1°C	■
Active power	0.1 kW	■
Reactive power	0.1 kvar	■
Apparent power	0.01 kVA	■
Remote setting via communication link		■

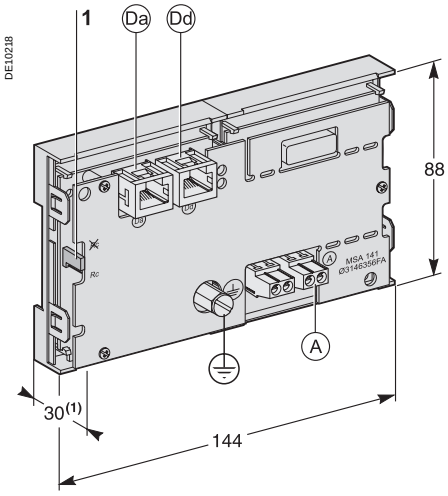

***(1)** 70 mm with CCA77x cord connected.*

Description and dimensions

(A) Terminal block for analog output.

(Da) RJ45 connector to connect the module to the base unit with a CCA77x cord.

(Dd) RJ45 connector to link up the next remote module with a CCA77x cord (according to application).

(⏚) Grounding/earthing terminal.

1 Jumper for impedance matching with load resistor (Rc), to be set to:
- ■ ~~Rc~~, if the module is not the last interlinked module (default position)
- ■ Rc, if the module is the last interlinked module.

Connection

Earthing terminal connection

By tinned copper braid or cable fitted with a 4 mm ring lug.

Connection of analog output to screw-type connector

- ■ 1 wire with cross-section 0.2 to 2.5 mm² (⩾ AWG 24-12)
- ■ or 2 wires with cross-section 0.2 to 1 mm² (⩾ AWG 24-16).

Wiring precautions

- ■ it is preferable to use shielded cables
- ■ use tinned copper braid to connect the shielding at least at the MSA141 end.

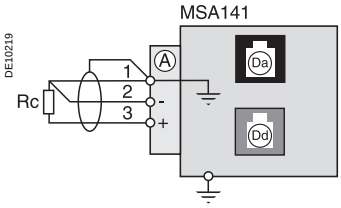

2-wire RS 485 network interface ACE949-2

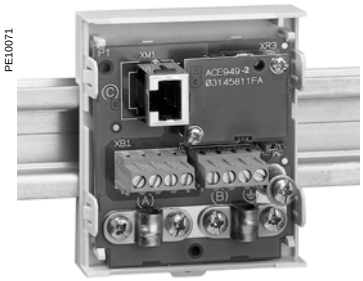

ACE949-2 2-wire RS 485 network connection interface.

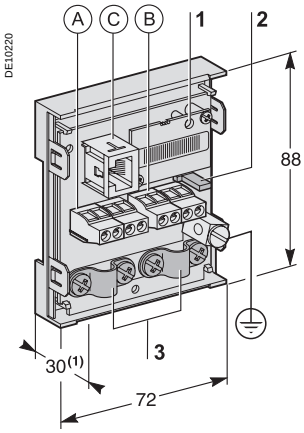

***(1)** 70 mm with CCA612 cord connected.*

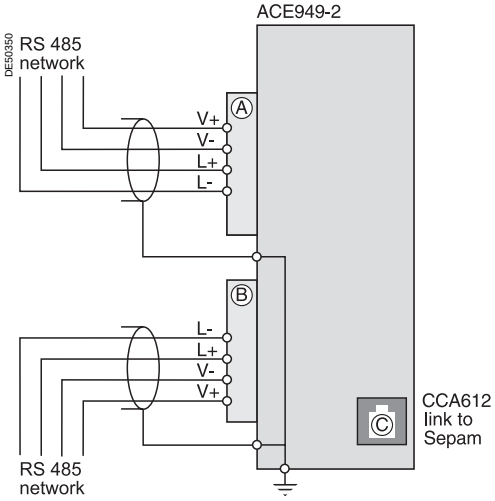

Function

The ACE949-2 interface performs 2 functions:
- electrical interface between Sepam and a 2-wire RS 485 communication network
- main network cable branching box for the connection of a Sepam with a CCA612 cord.

Characteristics

ACE949-2 module	
Weight	0.1 kg
Assembly	On symmetrical DIN rail
Operating temperature	-25°C to +70°C
Environmental characteristics	Same characteristics as Sepam base unit
2-wire RS 485 electrical interface	
Standard	EIA 2-wire RS 485 differential
Distributed power supply	External, 12 V DC or 24 V DC ±10 %
Consumption	16 mA in receiving mode
	40 mA maximum in sending mode

Maximum length of 2-wire RS 485 network with standard cable		
Number of Sepam units	**Maximum length with 12 V DC power supply**	**Maximum length with 24 V DC power supply**
5	320 m	1000 m
10	180 m	750 m
20	160 m	450 m
25	125 m	375 m

***Note:** lengths multiplied by 3 with FILECA F2644-1 high-performance cable.*

Description and dimensions

(A) and (B) Terminal blocks for network cable.

(C) RJ45 plug to connect the interface to the base unit with a CCA612 cord.

(⏚) Grounding/earthing terminal.

1 Green LED, flashes when communication is active (sending or receiving in progress).

2 Jumper for RS 485 network line-end impedance matching with load resistor (Rc), to be set to:
- ~~Rc~~, if the module is not at one end of the RS 485 network (default position)
- Rc, if the module is at one end of the RS 485 network.

3 Network cable clamps (inner diameter of clamp = 6 mm).

Connection

- connection of network cable to screw-type terminal blocks (A) and (B)
- connection of earthing terminal by tinned copper braid or cable fitted with 4 mm ring lug
- the interfaces are fitted with clamps to hold the network cable and recover shielding at the incoming and outgoing points of the network cable:
  - ◻ the network cable must be stripped
  - ◻ the cable shielding braid must be around and in contact with the clamp
- the interface is to be connected to connector (C) on the base unit using a CCA612 cord (length = 3 m, green fittings)
- the interfaces are to be supplied with 12 V DC or 24 V DC
- refer to the "Sepam - RS 485 network connection guide " PCRED399074EN for all the details on how to implement a complete RS 485 network.

4-wire RS 485 network interface ACE959

PE10072

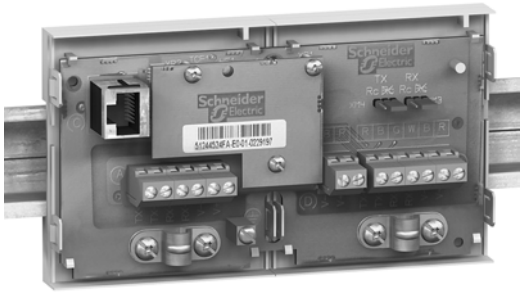

ACE959 4-wire RS 485 network connection interface.

DE10222

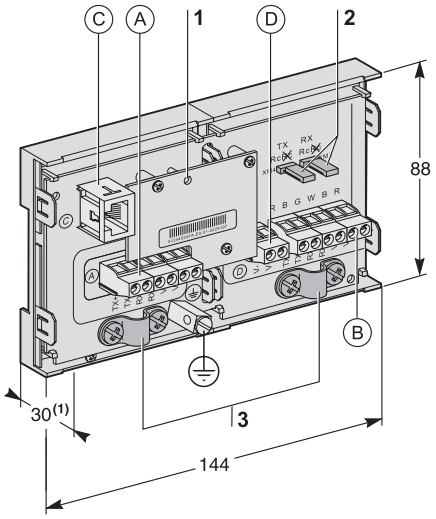

***(1)** 70 mm with CCA612 cord connected.*

DE50351

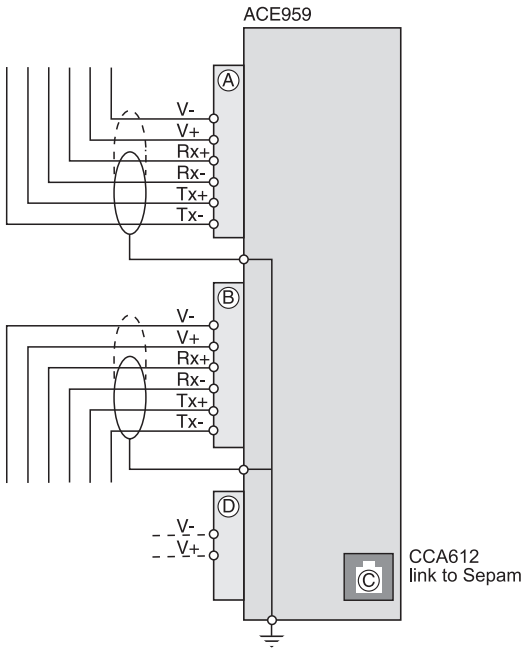

***Note:** Sepam receiving: Rx+, Rx- (or IN+, IN-)*
Sepam sending: Tx+, Tx- (or OUT+, OUT-).

Function

The ACE959 interface performs 2 functions:
- electrical interface between Sepam and a 4-wire RS 485 communication network
- main network cable branching box for the connection of a Sepam with a CCA612 cord.

Characteristics

ACE959 module	
Weight	0.2 kg
Assembly	On symmetrical DIN rail
Operating temperature	-25°C to +70°C
Environmental characteristics	Same characteristics as Sepam base unit
4-wire RS 485 electrical interface	
Standard	EIA 4-wire RS 485 differential
Distributed power supply	External, 12 V DC or 24 V DC ±10 %
Consumption	16 mA in receiving mode
	40 mA maximum in sending mode

Maximum length of 4-wire RS 485 network with standard cable		
Number of Sepam units	**Maximum length with 12 V DC power supply**	**Maximum length with 24 V DC power supply**
5	320 m	1000 m
10	180 m	750 m
20	160 m	450 m
25	125 m	375 m

***Note:** lengths multiplied by 3 with FILECA F3644-1 high-performance cable.*

Description and dimensions

(A) and (B) Terminal blocks for network cable.
(C) RJ45 plug to connect the interface to the base unit with a CCA612 cord.
(D) Terminal block for a separate auxiliary power supply (12 V DC or 24 V DC).
(⏚) Grounding/earthing terminal.

1 Green LED, flashes when communication is active (sending or receiving in progress).
2 Jumper for RS 485 network line-end impedance matching with load resistor (Rc), to be set to:
- ~~Rc~~, if the module is not at one end of the RS 485 network (default position)
- Rc, if the module is at one end of the RS 485 network.

3 Network cable clamps (inner diameter of clamp = 6 mm).

Connection

- connection of network cable to screw-type terminal blocks (A) and (B)
- connection of earthing terminal by tinned copper braid or cable fitted with 4 mm ring lug
- the interfaces are fitted with clamps to hold the network cable and recover shielding at the incoming and outgoing points of the network cable:
  - ◻ the network cable must be stripped
  - ◻ the cable shielding braid must be around and in contact with the clamp
- the interface is to be connected to connector (C) on the base unit using a CCA612 cord (length = 3 m, green fittings)
- the interfaces are to be supplied with 12 V DC or 24 V DC
- the ACE959 can be connected to a separate distributed power supply (not included in shielded cable). Terminal block (D) is used to connect the distributed power supply module
- refer to the "Sepam - RS 485 network connection guide" PCRED399074EN for all the details on how to implement a complete RS 485 network.

Fiber optic interface ACE937

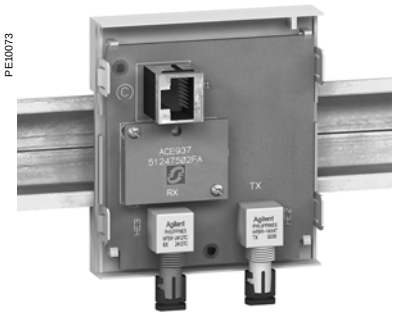

ACE937 fiber optic connection interface.

Function

The ACE937 interface is used to connect Sepam to a fiber optic communication star system.
This remote module is connected to the Sepam base unit by a CCA612 cord.

Characteristics

ACE937 module	
Weight	0.1 kg
Assembly	On symmetrical DIN rail
Power supply	Supplied by Sepam
Operating temperature	-25°C to +70°C
Environmental characteristics	Same characteristics as Sepam base unit
Fiber optic interface	
Wavelength	820 nm (infra-red)
Type of connector	ST
Fiber type	Multimode glass

Fiber optic diameter (µm)	Numerical aperture (NA)	Maximum attenuation (dBm/km)	Minimum optical power available (dBm)	Maximum length of fiber (m)
50/125	0.2	2.7	5.6	700
62.5/125	0.275	3.2	9.4	1800
100/140	0.3	4	14.9	2800
200 (HCS)	0.37	6	19.2	2600

Maximum length calculated with:
- minimum optical power available
- maximum fiber attenuation
- losses in 2 ST connectors: 0.6 dBm
- optical power margin: 3 dBm (according to IEC60870 standard).

Example for a 62.5/125 µm fiber
Lmax = (9.4 - 3 -0.6) / 3.2 = 1.8 km.

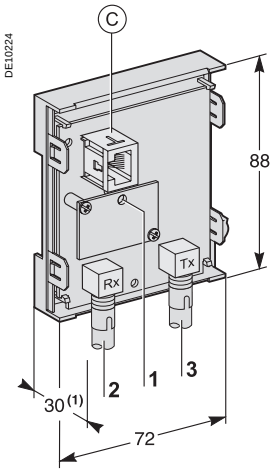

***(1)** 70 mm with CCA612 cord connected.*

Description and dimensions

(C) RJ 45 plug to connect the interface to the base unit with a CCA612 cord.

1 Green LED, flashes when communication is active (sending or receiving in progress)..
2 Rx, female ST type connector (Sepam receiving).
3 Tx, female ST type connector (Sepam sending).

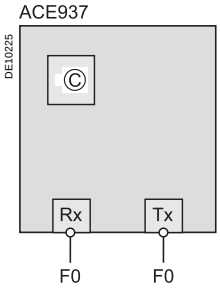

Connection

- the sending and receiving fiber optics fibers must be equipped with male ST type connectors
- fiber optics screw-locked to Rx and Tx connectors
- the interface is to be connected to connector (C) on the base unit using a CCA612 cord (length = 3 m, green fittings)

Contents

User Machine Interfaces

Two different levels of user machine interface (UMI) are offered on the front panel of Sepam:
■ basic UMI, with signal lamps, for installations operated via a remote system with no need for local operation
■ advanced UMI, with keypad and graphic LCD display, giving access to all the information necessary for local operation and Sepam parameter setting.

The UMI on the front panel of Sepam may be completed by an expert UMI comprising the SFT2841 PC software tool, which may be used for all Sepam parameter setting, local operation and customization functions.

The expert UMI comes as a kit, the SFT2841 kit, which includes:
■ a CD-ROM, with
□ SFT2841 setting and operation software
□ SFT2826 disturbance recording file display software
■ CCA783 cord, for connection between the PC and the serial port on the front panel of Sepam.

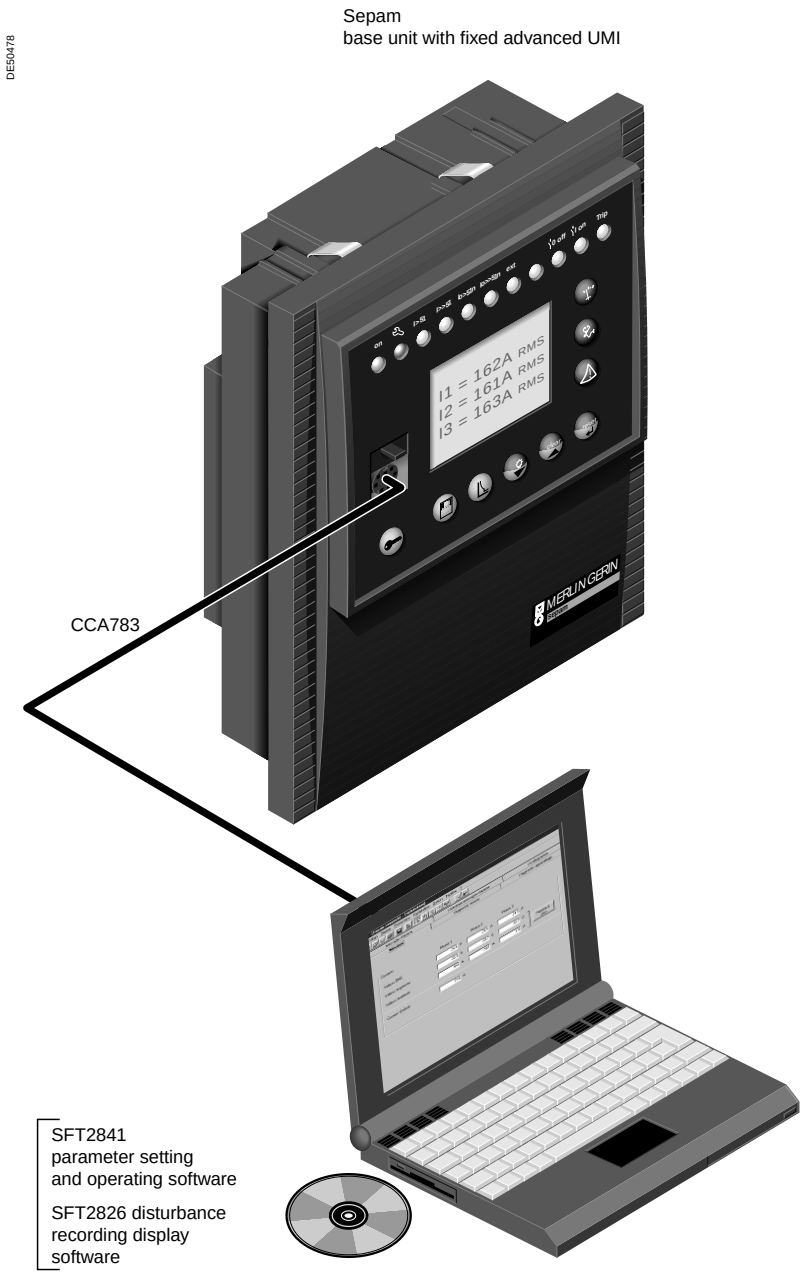

Expert UMI - SFT2841 Presentation

The expert UMI is available (as a complement to the basic or advanced UMI integrated in the product) on the screen of a PC equipped with the SFT2841 software tool and connected to the RS 232 link on the front panel of Sepam (run in a Windows ≥ V95 or NT environment). All the data used for the same task are grouped together in the same screen to facilitate operation. Menus and icons are used for fast, direct access to the required information.

Current operation

- display of all metering and operation data
- display of alarm messages with the time of appearance (date, hour, mn, s, ms)
- display of diagnosis data such as: tripping current, number of switchgear operations and cumulative breaking current
- display of all the protection and parameter settings
- display of the logic status of inputs, outputs and signal lamps.

This UMI is the solution suited to occasional local operation, for demanding personnel who require fast access to all the information.

Parameter and protection setting (1)

- display and setting of all the parameters of each protection function in the same page
- program logic parameter setting, parameter setting of general installation and Sepam data
- input data may be prepared ahead of time and transferred into the corresponding Sepam units in a single operation (downloading function).

Main functions performed by SFT2841:

- changing of passwords
- entry of general characteristics (ratings, integration period, …)
- entry of protection settings
- changing of program logic assignments
- enabling/disabling of functions
- saving of files.

Saving

- protection and parameter setting data may be saved
- printing of reports is possible as well.

This UMI may also be used to recover disturbance recording files and provide graphic display using the SFT2826 software tool.

Operating assistance

Access from all the screens to a help section which contains all the technical data required for Sepam installation and use.

(1) Modes accessed via 2 passwords (protection setting level, parameter setting level).

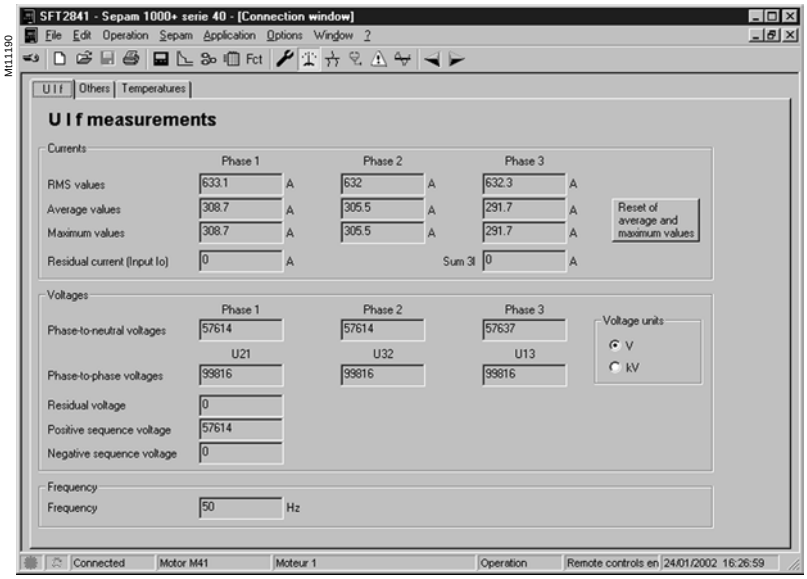

Example of a measurement display screen.

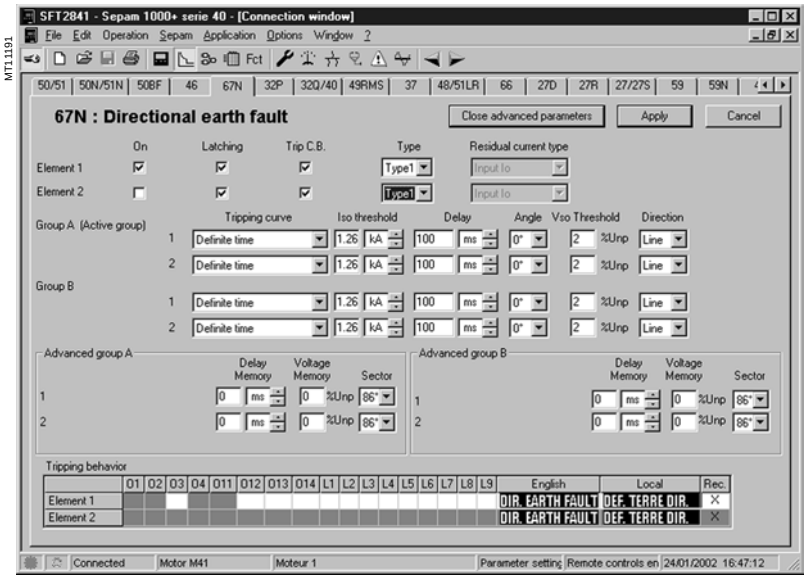

Example of a protection setting screen.

Expert UMI - SFT2841
General screen organization

A Sepam document is displayed on the screen via a graphic interface that has the conventional Windows features.
All the SFT2841 software screens are set up in the same way, i.e.:
■ Ⓐ : title bar, with:
□ name of the application (SFT2841)
□ identification of the Sepam document displayed
□ window manipulation handles
■ Ⓑ : menu bar, to access all the SFT2841 software functions (unavailable functions are dimmed)
■ Ⓒ : toolbar, a group of contextual icons for quick access to the main functions (also accessed via the menu bar)
■ Ⓓ : work zone available to the user, presented in the form of tab boxes
■ Ⓔ : status bar, with the following information relating to the active document:
□ alarm on
□ identification of the connection window
□ SFT2841 operating mode, connected or not connected,
□ type of Sepam
□ Sepam editing identification
□ identification level
□ Sepam operating mode
□ PC date and time.

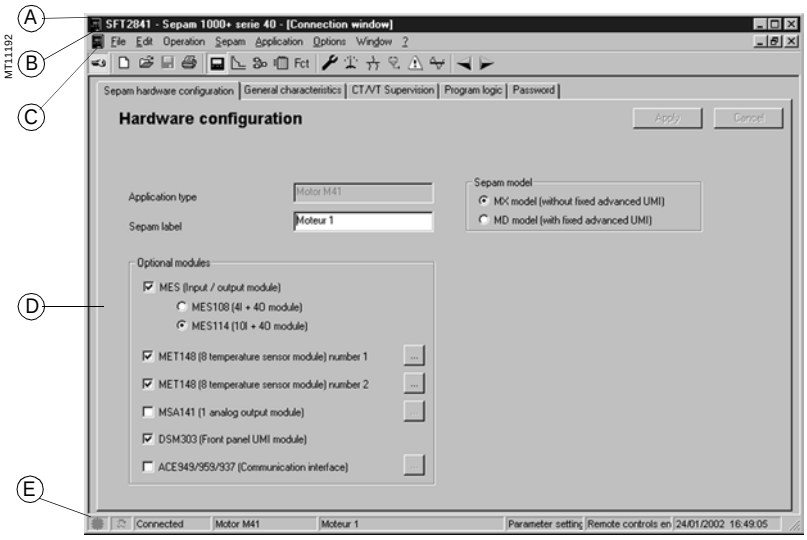

Example of Sepam configuration screen.

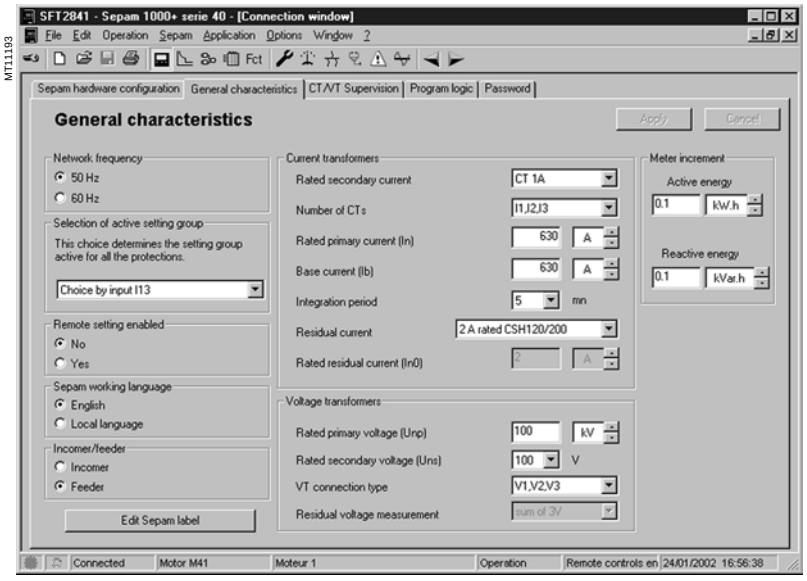

Example of general characteristics screen.

Guided navigation

A guided navigation mode is proposed to make it easier to enter all of the Sepam parameter and protection settings. It allows users to go through all the data input screens in the natural order.
The sequencing of the screens in guided mode is controlled by clicking on 2 icons in the toolbar Ⓒ:
■ ◀: to go back to the previous screen
■ ▶: to go to the next screen.

The screens are linked up in the following order:
1. Sepam hardware configuration
2. General characteristics
3. CT/VT supervision
4. Program logic
5. Password
6. Setting screens for the protection functions available, according to the type of Sepam
7. Logical equation editor
8. Various tabs of the control matrix
9. Disturbance recording setup.

On-line help

The operator may look up on-line help at any time via the "?" command in the menu bar.
To use the on-line help, a browser such as Netscape Navigator or Internet Explorer MS is required.

Expert UMI - SFT2841
Use of the software

Not connected to Sepam mode

Sepam parameter and protection setting

The parameter and protection setting of a Sepam using SFT2841 consists of preparing the Sepam file containing all the characteristics that are specific to the application, a file that is then downloaded into Sepam at the time of commissioning.

Operating mode:

■ create a Sepam file for the type of Sepam to be set up. (The newly created file contains the Sepam factory-set parameter and protection settings)

■ modify the Sepam general settings and protection function settings:

□ all the data relating to the same function are grouped together in the same screen

□ it is advisable to enter all the parameters and protection settings in the natural order of the screens proposed by the guided navigation mode.

Entry of parameter and protection settings:

■ the parameter and protection setting input fields are suited to the type of value:

□ choice buttons

□ numerical value input fields

□ dialogue box (Combo box)

■ the user must "Apply" or "Cancel" the new values entered before going on to the following screen

■ the consistency of the new values applied is checked:

□ an explicit message identifies inconsistent values and specifies the authorized values

□ values that have become inconsistent following a parameter modification are adjusted to the closest consistent value.

Connected to Sepam mode

Precaution

When a laptop is used, given the risks inherent to the accumulation of static electricity, the customary precaution consists of discharging in contact with an earthed metal frame before phsycially connecting the CCA783 cord (supplied with the SFT2841 kit).

Plugging into Sepam

■ plugging of the 9-pin connector (SUB-D type) into one of the PC communication ports. Configuration of the PC communciation port via the “Communication port” function in the “Options” menu

■ plugging of the 6-pin connector into the connector (round minidin type) situated behind the blanking plate on the front panel of Sepam or the DSM303 module.

Connection to Sepam

2 possibilities for setting up the connection between SFT2841 and Sepam:

■ “Connection” function in the “File” menu

■ choice of “connect to the Sepam” at the start-up of SFT2841.

Once the connection with Sepam has been established, “Connected” appears in the status bar, and the Sepam connection window may be accessed in the work zone.

User identification

The window intended for the entry of the 4-digit password is activated:

■ via the “Passwords” tab

■ via the “Identification” function in the “Sepam” menu

■ via the “Identification” icon .

The "Return to Operating mode" function in the “Passwords” tab removes access rights to parameter and protection setting mode.

Downloading of parameters and protection settings

Parameter and protection setting files may only be downloaded in the connected Sepam in Parameter setting mode.

Once the connection has been established, the procedure for downloading a parameter and protection setting file is as follows:

■ activate the “Download Sepam” function in the “Sepam” menu

■ select the file(*.S40, *.S41, *.S42, *.T40, *.T42, *.M41, *.G40 according to the type of application) which contains the data to be downloaded.

Return to factory settings

This operation is only possible in Parameter setting mode, via the “Sepam” menu. All of the Sepam general characteristics, protection settings and the control matrix go back to the default values.

Uploading of parameter and protection settings

The connected Sepam parameter and protection setting file may only be uploaded in Operating mode.

Once the connection has been established, the procedure for uploading a parameter and protection setting file is as follows:

■ activate the “Upload Sepam” function in the “Sepam” menu

■ select the *.rpg file that is to contain the uploaded data

■ acknowledge the end of operation report.

Local operation of Sepam

Connected to Sepam, SFT2841 offers all the local operating functions available in the advanced UMI screen, plus the following functions:

■ setting of Sepam internal clock, via the “general characteristics” tab

■ implementation of the disturbance recording function, via the “Fault recording” menu “OPG”: validation/inhibition of the function, recovery of Sepam files, start-up of SFT2826

■ consultation of the history of the last 64 Sepam alarms, with time-tagging

■ access to Sepam diagnostic data, in the “Sepam” tab box, included in “Sepam diagnosis”

■ in Parameter setting mode, the switchgear diagnositic values may be modified: operation counter, cumulative breaking current to reset the values after a change of breaking device.

UMI on front panel

Basic UMI

This UMI includes:
■ 2 signal lamps indicating Sepam operating status:
□ green "**on**" indicator: device on
□ red "**wrench**" indicator: device unavailable (initialization phase or detection of internal failure)
■ 9 parameterizable yellow signal lamps, fitted with a standard label (with SFT2841, a customized label can be printed on a laser printer)
■ "**reset**" button for clearing faults and resetting
■ 1 connection port for the RS 232 link with the PC (CCA783 cord), the connector is protected by a sliding cover.

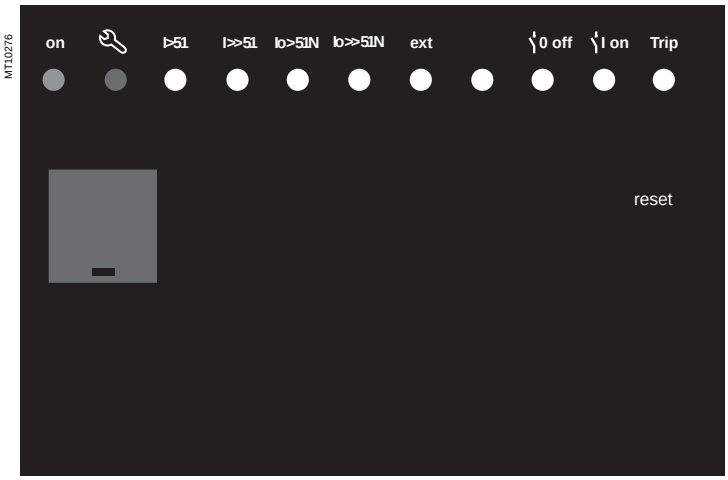

Fixed or remote advanced UMI

In addition to the basic UMI functions, this version provides:
■ **a "graphic" LCD display** for the display of measurements, parameter/protection settings and alarm and operating messages.
The number of lines, size of characters and symbols are in accordance with the screens and language versions.
The LCD display is back-lit when the user presses a key.
■ **a 9-key keypad with 2 operating modes:**

White keys for current operation:
① display of measurements,
② display of "switchgear, network diagnosis" data,
③ display of alarm messages,
④ resetting,
⑤ acknowledgment and clearing of alarms.

Blue keys activated in parameter and protection setting mode:
⑦ access to protection settings,
⑧ access to Sepam parameter setting,
⑨ used to enter the 2 passwords required to change protection and parameter settings.
The "↵, ▲, ▼" (④, ⑤, ⑥) keys are used to browse through the menus and to scroll and accept the values displayed.
⑥ "**lamp test" key:**
switching on sequence of all the signal lamps.

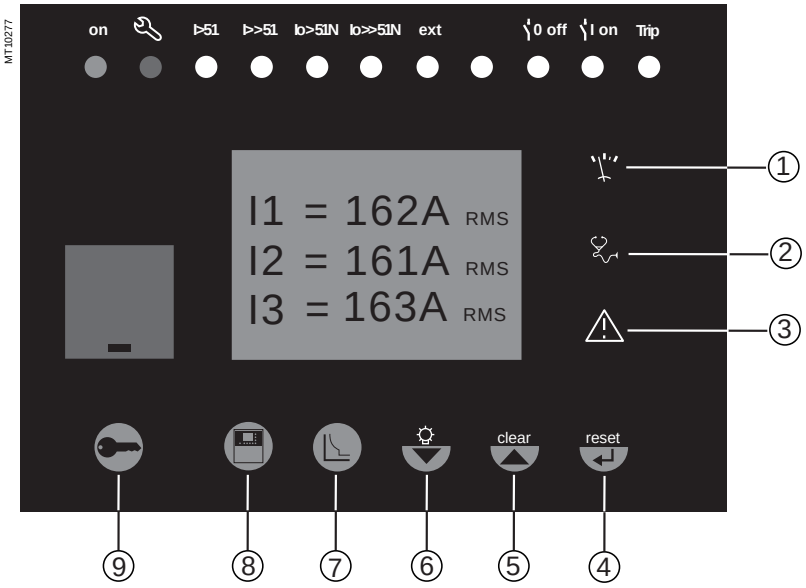

Access to measurements and parameters

The measurements and parameters may be accessed using the metering, diagnosis, status and protection keys. They are arranged in a series of screens as shown in the diagram opposite.

■ the data are split up by category in 4 menus, associated with the following 4 keys:

□ key: measurements
choice: current, voltage, frequency, power energy

□ key: switchgear diagnosis and additional measurements
choice: diagnosis, tripping contexts (x5)

□ key: general settings
choice: general, modules, I/U sensors, CT/VT supervision, program logic, I/O test

□ key: protection settings
choice: phase I, residual I, directional I, voltage, frequency, power, machine, recloser

■ when the user presses a key, the system moves on to the next screen in the loop. When a screen includes more than 4 lines, the user moves about in the screen via the cursor keys (,).

Example: measurement loop

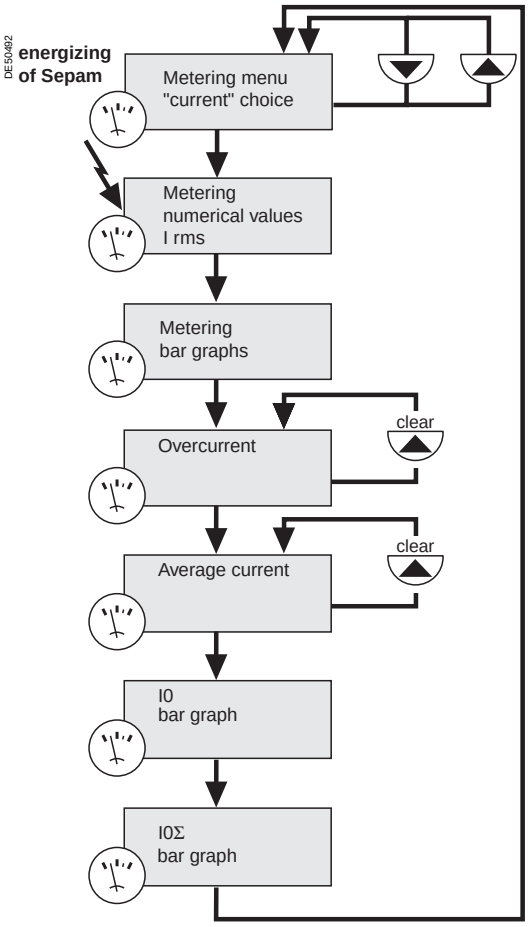

Protection and parameter setting modes

There are 3 levels of use:

■ operator level: used to access all the screens in read mode and does not require any passwords

■ protection setter level: requires the entry of the first password (key), allows protection setting (key)

■ parameter setter level: requires the entry of the second password (key), allows modification of the general settings as well (key).

Only general setters may modify the passwords.

The passwords have 4 digits.

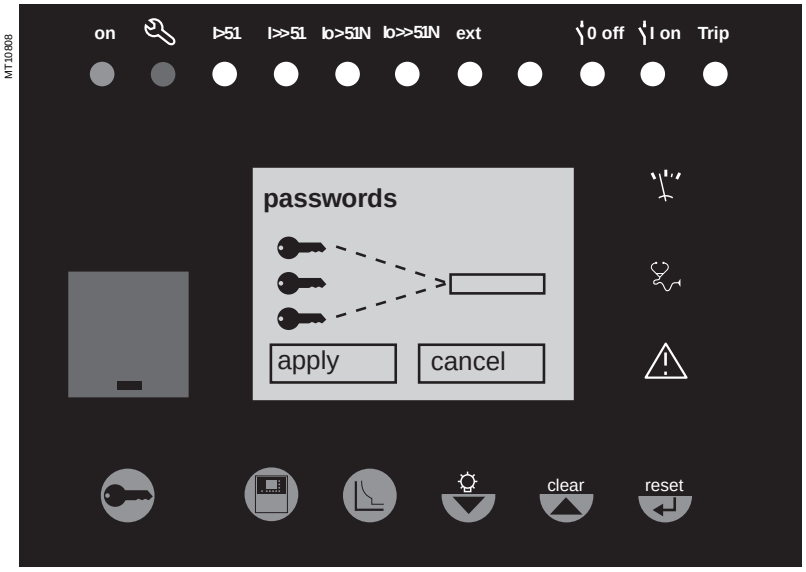

Advanced UMI
White keys for current operation

key

The "metering" key is used to display the variables measured by Sepam.

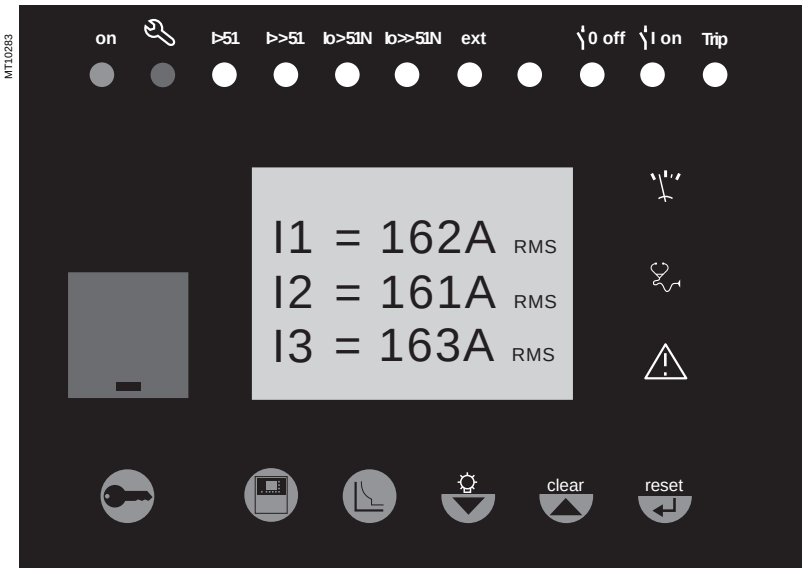

key

The “diagnosis” key provides access to diagnostic data on the breaking device and additional measurements, to facilitate fault analysis.

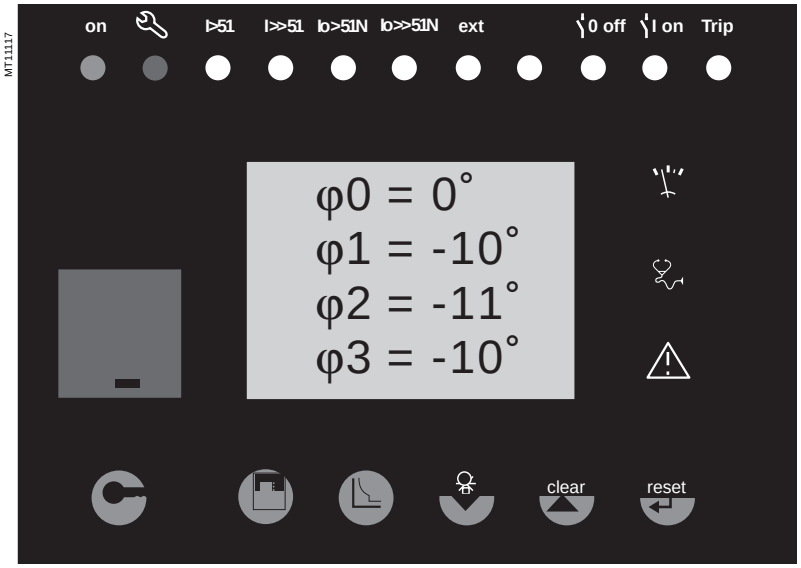

key

The “alarms” key is used to consult the 16 most recent alarms that have not yet been cleared.

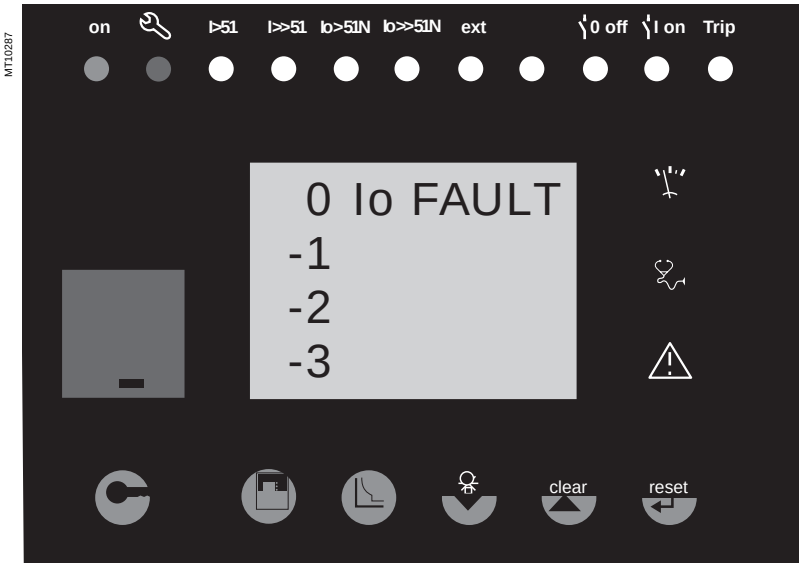

Advanced UMI
White keys for current operation

reset key

The “reset” key resets Sepam (extinction of signal lamps and resetting of protection units after the disappearance of faults).
The alarm messages are not erased.
Sepam resetting must be confirmed.

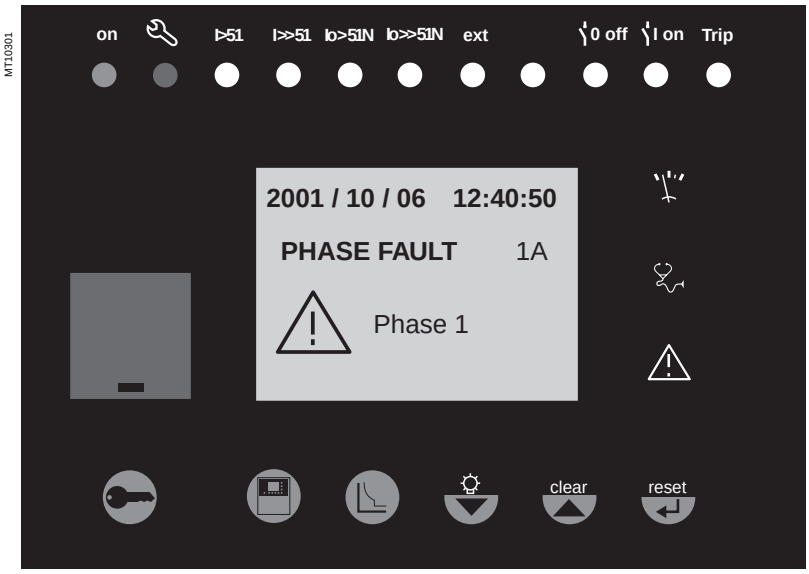

clear key

When an alarm is present on the Sepam display, the "clear" key is used to return to the screen that was present prior to the appearance of the alarm or to a less recent unacknowledged alarm. Sepam is not reset.
In the metering or diagnosis or alarm menus, the "clear" key may be used to reset the average currents, peak demand currents, running hours counter and alarm stack when they are shown on the display.

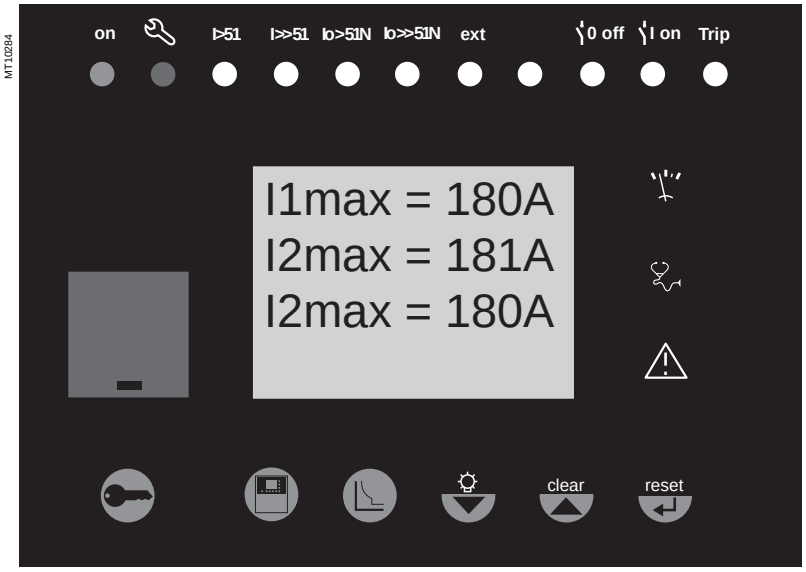

key

Press the "lamp test" key for 5 seconds to start up a LED and display test sequence.
When an alarm is present, the "lamp test" key is disabled.

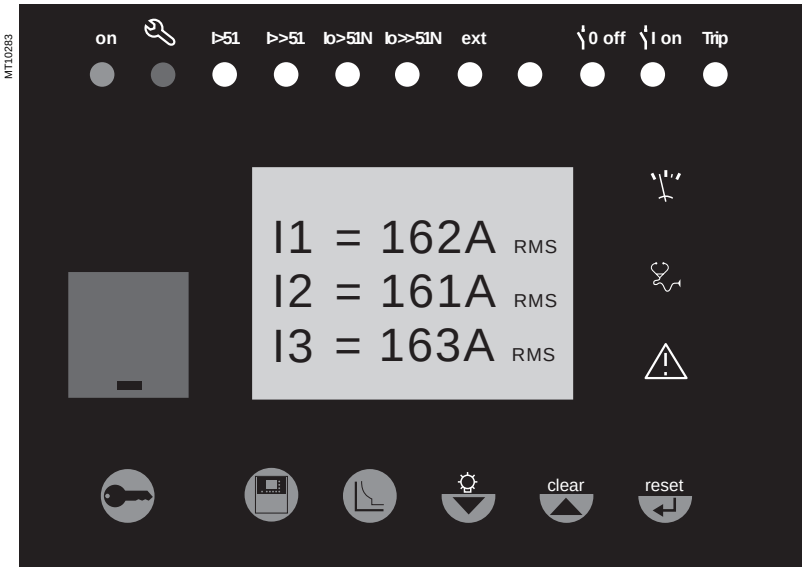

Advanced UMI
Blue keys for parameter and protection setting

key

The “status” key is used to display and enter the Sepam general settings. They define the protected equipment characteristics and the different optional modules.

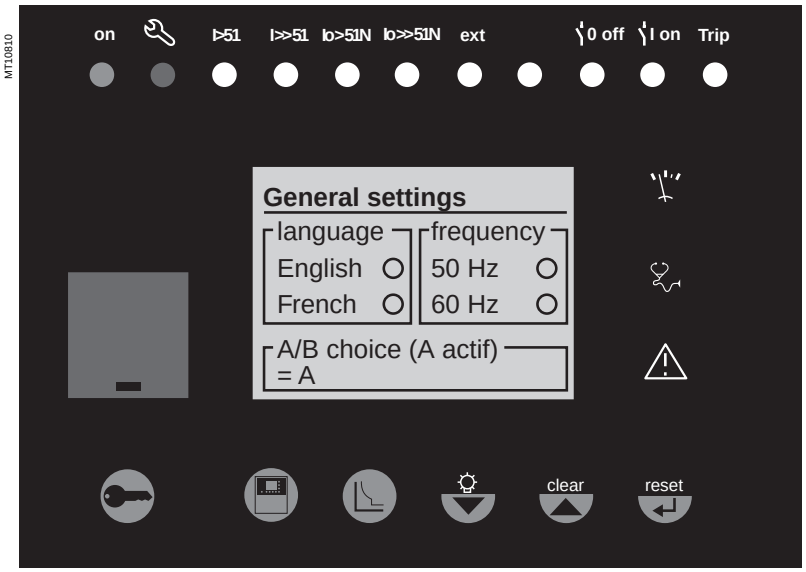

key

The “protection” key is used to display, set and enable or disable the protection units.

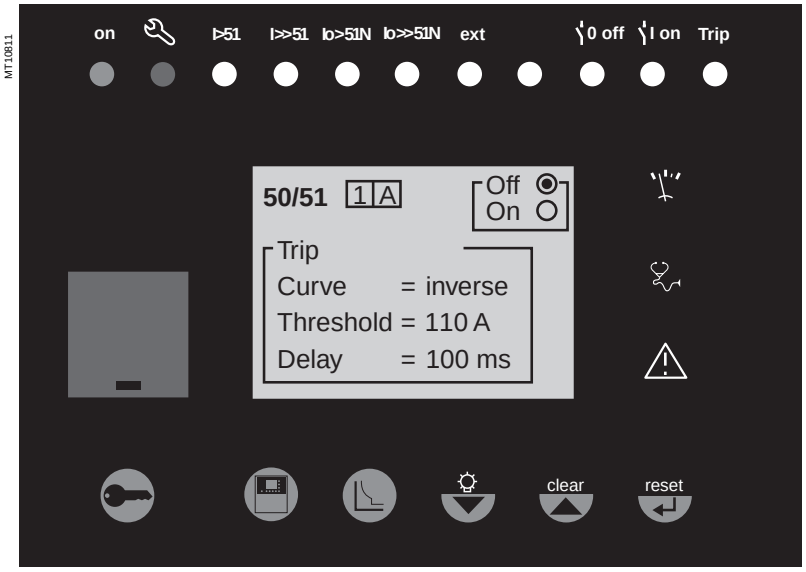

key

The "wrench" key is used to enter the passwords for access to the different modes:
- protection setting
- parameter setting.

and return to "operating" mode (with no passwords).

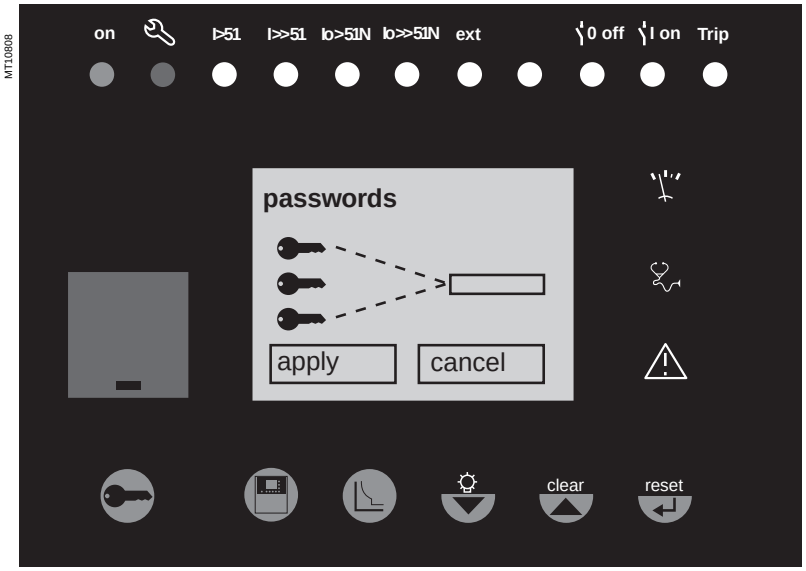

Note: *for parameter setting of signal lamps and output relays, it is necessary to use the SFT2841 software, "program logic" menu.*

Advanced UMI
Blue keys for parameter and protection setting

reset key

The ↵ key is used to confirm the protection settings, parameter settings and passwords.

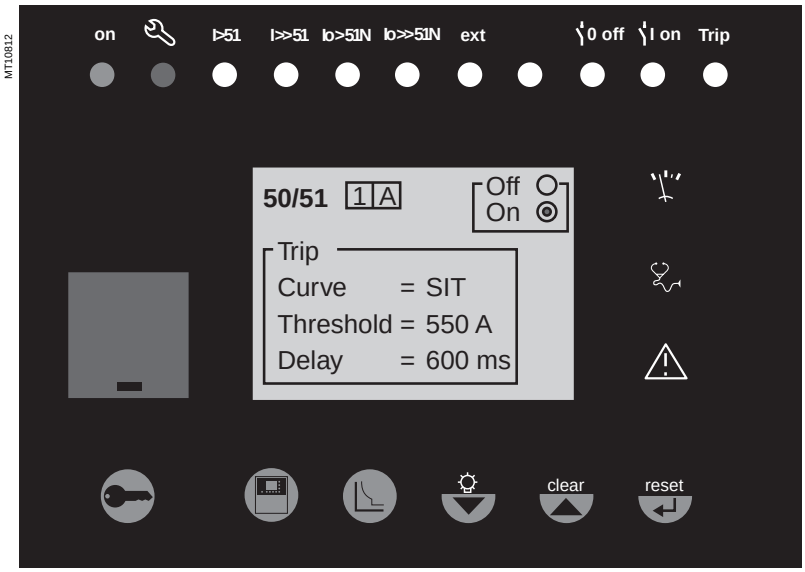

clear key

When there are no alarms on the Sepam display and the user is in the status, protection or alarm menu, the ▲ key is used to move the cursor upward.

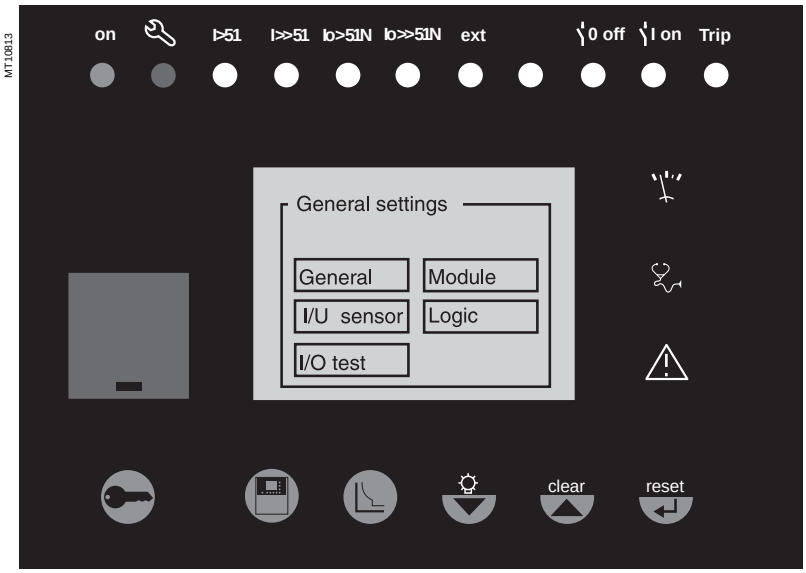

key

When there are no alarms on the Sepam display and the user is in the status, protection or alarm menu, the ▼ key is used to move the cursor downward.

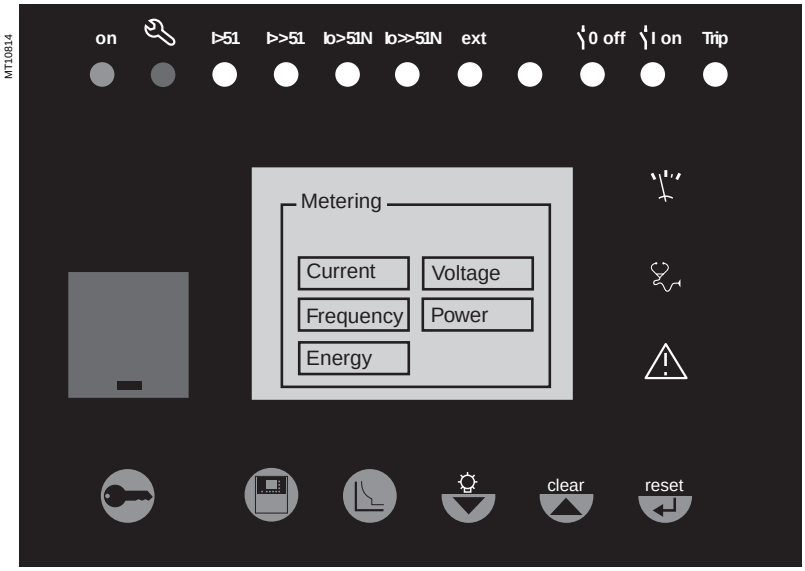

Use of passwords

Sepam has two 4-digit passwords:
- the first password, symbolized by a key, is used to modify the protection settings
- the second password, symbolized by two keys, is used to modify the protection settings and all the general settings.

The 2 factory-set passwords are: 0000

Entry of passwords

Press the key to display the following screen:

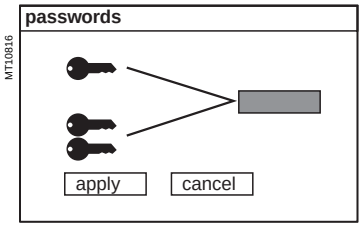

Press the key to position the cursor on the first digit.
0 X X X
Scroll the digits using the cursor keys (,), then confirm to go on to the next digit by pressing the key.
Do not use characters other than numbers 0 to 9 for each of the 4 digits.
When the password for your qualification level is entered, press the key to position the cursor on the apply box. Press the key again to confirm.
When Sepam is in protection setting mode, a key appears at the top of the display.
When Sepam is in parameter setting mode, two keys appear at the top of the display.

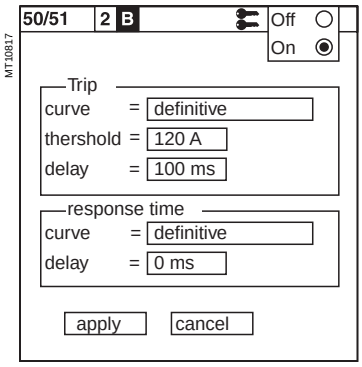

Access to the protection setting or parameter setting modes is disabled:
- by pressing the key
- automatically if no keys are activated for more than 5 minutes.

Modification of passwords

Only the parameter setting qualification level (2 keys) or the SFT2841 allow modification of the passwords. Passwords are modified in the general settings screen, key.

Loss of passwords

If the factory-set passwords have been modified and the latest passwords entered have been irretrievably lost by the user, please contact your local after-sales service representative.

Entry of parameters or settings

Principle applicable to all Sepam screens

(example of phase overcurrent protection)
- enter the password
- access the corresponding screen by successively pressing the key
- move the cursor by pressing the key for access to the desired field (e.g. curve)
- press the key to confirm the choice, then select the type of curve by pressing the or key and confirm by pressing the key
- press the key to reach the following fields, up to the apply box. Press the key to confirm the setting.

Entry of numerical values

(e.g. current threshold value).
- position the cursor on the required field using the keys and confirm the choice by pressing the key
- select the first digit to be entered and set the value by pressing the keys (choice of ___. 0……9)
- press the key to confirm the choice and go on to the following digit.

The values are entered with 3 significant digits and a period.
The unit (e.g. A or kA) is chosen using the last digit.
- press the key to confirm the entry, then press the key for access to the following field
- all of the values entered are only effective after the user confirms by selecting the apply box at the bottom of the screen and presses the key.

Default parameters, all applications

Hardware configuration

- identification: Sepam xxxx
- model: MX
- MES module: absent
- MET modules: absent
- MSA module: absent
- DSM module: present
- ACE module: absent

Output parameter setting

- outputs used: O1 to O4
- shunt trip units: O1, O3
- undervoltage trip units: O2, O4
- impulse mode: no (latched)

Program logic

- circuit breaker control: yes
- logic discrimination: no
- recloser: no
- logic input assignment: not used

General characteristics

- network frequency: 50 Hz
- group of settings: A
- enable remote setting: no
- working language: English
- type of cubicle: feeder (except G40: incomer)
- CT rating: 5 A
- number of CTs: 3 (I1, I2, I3)
- rated current In: 630 A
- basic current Ib: 630 A
- integration period: 5 mn
- residual current: none
- rated primary voltage (Unp): 20 kV
- rated secondary voltage (Uns): 100 V
- voltages measured by VTs: U21, U32
- residual voltage: none
- disturbance recording: 9 x 2-second blocks
- pre-trig for disturbance recording: 36 periods.

Protection functions

- all the protections are "off"
- the settings comprise values and choices that are informative and consistent with the general characteristics by default (in particular rated current and voltage In and Un)
- tripping behavior:
  - latching: 50/51, 50N/51N, 50V/51V, 67, 67N, 46, 32P, 32Q/40, 48/51LR, 27D, 38/49T, 49RMS
  - participation in circuit breaker control: 50/51, 50N/51N, 50V/51V, 67, 67N, 46, 32P, 32Q/40, 48/51LR, 27D, 49RMS, 38/49T, 37
- disturbance recording triggering: with.

Control matrix

- activation of signal lamps according to front panel markings
- watchdog on output O4
- disturbance recording triggering upon activation of pick up signal.

Principles and methods

Protection relay testing

Protection relays are tested prior to commissioning, with the dual aim of maximizing availability and minimizing the risk of malfunctioning of the assembly being commissioned. The problem consists of defining the consistency of the appropriate tests, keeping in mind that the relay is always involved as the main link in the protection chain.
Therefore, protection relays based on electromechanical and static technologies, the performances of which are not totally reproducible, must be systematically submitted to detailed testing, not only to qualify relay commissioning, but also to check that they actually are in good operating order and maintain the required level of performance.

The Sepam concept makes it possible to do away with such testing, since:
■ the use of digital technology guarantees the reproducibility of the performances announced
■ each of the Sepam functions has undergone full factory-qualification
■ an internal self-testing system provides continuous information on the state of the electronic components and the integrity of the functions (e.g. automatic tests diagnose the level of component polarization voltages, the continuity of the analog value acquisition chain, non-alteration of RAM memory, absence of settings outside the tolerance range) and thereby guarantees a high level of availability

Sepam is therefore ready to operate without requiring any additional qualification testing that concerns it directly.

Sepam commissioning tests

The preliminary Sepam commissining tests may be limited to a commissioning check, i.e.:
■ checking of compliance with BOMs and hardware installation diagrams and rules during a preliminary general check
■ checking of the compliance of the general settings and protection settings entered with the setting sheets
■ checking of current or voltage input connection by secondary injection tests
■ checking of logic input and output connection by simulation of input data and forcing of output status
■ validation of the complete protection chain (possible customized logical functions included)
■ checking of the connection of the optional MET148-2 and MSA141 modules.
The various checks are described further on.

General principles

■ all the tests should be carried out with the MV cubicle completely isolated and the MV circuit breaker racked out (disconnected and open)
■ all the tests are to be performed in the operating situation: no wiring or setting changes, even temporary changes to facilitate testing, are allowed.
■ the SFT2841 parameter setting and operating software is the basic tool for all Sepam users. It is especially useful during Sepam commissioning tests. The tests described in this document are systematically based on the use of that tool.
The commissioning tests may be performed without the SFT2841 software for Sepam units with advanced UMIs.

Method

For each Sepam:
■ only carry out the checks suited to the hardware configuration and the functions activated
(A comprehensive description of all the tests is given further on)
■ use the test sheet provided to record the results of the commissioning tests.

Checking of current and voltage input connections
The secondary injection tests to be carried out to check the connection of the current and voltage inputs are described according to:
■ the type of current and voltage sensors connected to Sepam, in particular for residual current and voltage measurement
■ the type of injection generator used for the tests: three-phase or single-phase generator.

The different possible tests are described further on by:
■ a detailed test procedure
■ the connection diagram of the associated test generator.

The table below specifies the tests to be carried out according to the type of measurement sensors and type of generator used, and indicates the page on which each test is described.

Current sensors	**3 CTs**	**3 CTs + 1 core balance CT**	**3 CTs**	**3 CTs + 1 core balance CT**
Voltage sensors	**3 VTs**	**3 VTs**	**2 phase VTs + 1 residual VT**	**2 phase VTs + 1 residual VT**
Three-phase generator	Page 7/18	Page 7/18 Page 7/22	Page 7/19 Page 7/23	Page 7/19 Page 7/24
Single-phase generator	Page 7/20	Page 7/20 Page 7/22	Page 7/21 Page 7/23	Page 7/21 Page 7/24

Testing and metering equipment required

Generators

■ dual sinusoidal AC current and voltage generator:
□ 50 or 60 Hz frequency (according to the country)
□ current adjustable up to at least 5 A rms
□ adjustable up to the rated secondary phase-to-phase voltage of the VTs
□ adjustable relative phase displacement (V, I)
□ three-phase or single-phase type
■ DC voltage generator:
□ adjustable from 48 to 250 V DC, for adaptation to the voltage level of the logic input being tested.

Accessories

■ plug with cord to match the "current" test terminal box installed
■ plug with cord to match the "voltage" test terminal box installed
■ electric cord with clamps, wire grip or touch probes.

Metering devices (built into the generator or separate)

■ 1 ammeter, 0 to 5 A rms
■ 1 voltmeter, 0 to 230 V rms
■ 1 phasemeter (if phase displacement (V, I) is not identified on the voltage and current generator).

Computer equipment

■ PC with minimal configuration:
□ MicroSoft Windows 95/98/NT 4.0/2000/XP
□ 133 MHz Pentium processor,
□ 64 MB of RAM (or 32 MB with Windows 95/98)
□ 64 MB free on hard disk
□ CD-ROM drive
■ SFT2841 software
■ CCA783 serial connection cord between the PC and Sepam.

Documents

■ complete connection diagram of Sepam and additional modules, with:
□ phase current input connection to the corresponding CTs via the test terminal box
□ residual current input connection
□ phase voltage input connection to the corresponding VTs via the test terminal box
□ residual voltage input connection to the corresponding VTs via the test terminal box
□ logic input and output connection
□ temperature sensor connection
□ analog output connection
■ hardware BOMs and installation rules
■ group of Sepam parameter and protection settings, available in paper format.

General examination and preliminary actions

Checking to be done prior to energizing

Apart from the mechanical state of the equipment, use the diagrams and BOMs provided by the contractor to check:

- identification of Sepam and accessories determined by the contractor
- correct earthing of Sepam (via terminal 17 of the 20-pin connector)
- correct connection of auxiliary voltage (terminal 1: AC or positive polarity; terminal 2: AC or negative polarity)
- presence of a residual current measurement core balance CT and/or additional modules connected to Sepam, when applicable
- presence of test terminal boxes upstream from the current inputs and voltage inputs
- conformity of connections between Sepam terminals and the test terminal boxes.

Connections

Check that the connections are tightened (with equipment non-energized).
The Sepam connectors must be correctly plugged in and locked.

Energizing

Switch on the auxiliary power supply.
Check that Sepam performs the following initialization sequence, which lasts approximately 6 seconds :

- green ON and red indicators on
- red indicator off
- pick-up of "watchdog" contact.

The first screen displayed is the phase current measurement screen.

Implementation of the SFT2841 software for PC

- start up the PC
- connect the PC RS232 serial port to the communication port on the front panel of Sepam using the CCA783 cord
- start up the SFT2841 software, by clicking on the related icon
- choose to connect to the Sepam to be checked.

Identification of Sepam

- note the Sepam serial number given on the label stuck to the right side plate of the base unit
- note the Sepam type and software version using the SFT2841 software, "Sepam Diagnosis" screen
- enter them in the test sheet.

Checking of parameter and protection settings

Determination of parameter and protection settings

All of the Sepam parameter and protection settings are determined ahead of time by the design department in charge of the application, and should be approved by the customer.
It is presumed that the study has been carried out with all the attention necessary, or even consolidated by a network coordination study.
All of the Sepam parameter and protection settings should be available at the time of commissioning:

- in paper file format (with the SFT2841 software, the parameter and protection setting file for a Sepam may be printed directly or exported in a text file for editing)
- and, when applicable, in the format of a file to be downloaded into Sepam using the SFT2841 software.

Checking of parameters and protection settings

Check to be made when the Sepam parameter and protection settings have not been entered or downloaded during commissioning testing, to confirm the conformity of the parameter and protection settings entered with the values determined during the study.
The aim of this check is not to confirm the relevance of the parameter and protection settings.

- go through all the parameter and protection setting screens in the SFT2841 software, in the order proposed in guided mode
- for each screen, compare the values entered in the Sepam with the values recorded in the parameter and protection setting file
- correct any parameter and protection settings that have not been entered correctly, proceeding as indicated in the "Expert UMI" section of the Use chapter of this manual.

Conclusion

Once the checking has been done and proven to be conclusive, as of that phase, the parameter and protection settings should not be changed any further and are considered to be final.
In order to be conclusive, the tests which follow must be performed with these parameter and protection settings; no temporary modification of any of the values entered, with the aim of facilitating a test, is permissible.

Checking of phase current and voltage input connection
With 3-phase generator

Procedure

■ connect the 3-phase voltage and current generator to the corresponding test terminal boxes, using the plugs provided, according to the appropriate diagram in terms of the number of VTs connected to Sepam:

□ block diagram with 3 VTs connected to Sepam

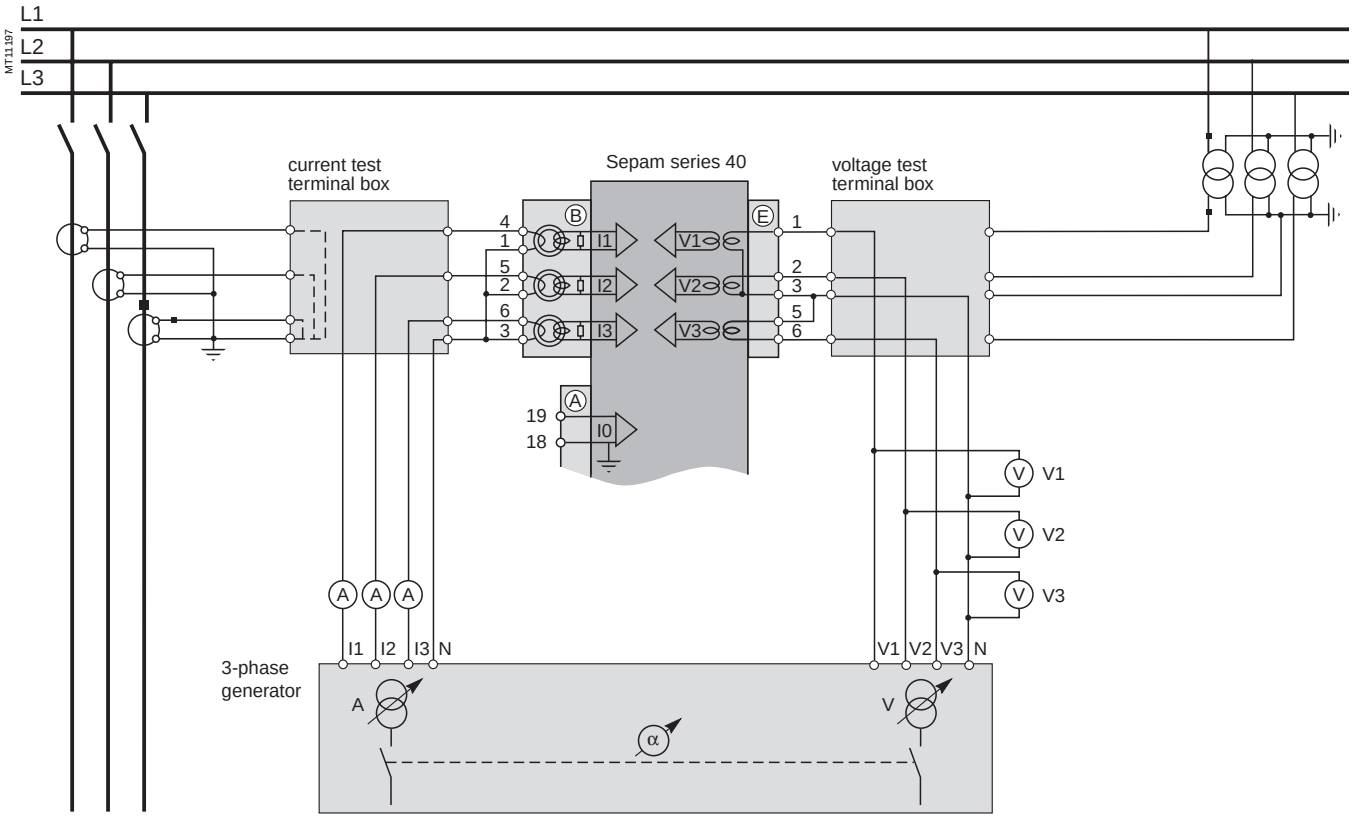

Checking of phase current and voltage input connection
With 3-phase generator

□ block diagram with 2 VTs connected to Sepam

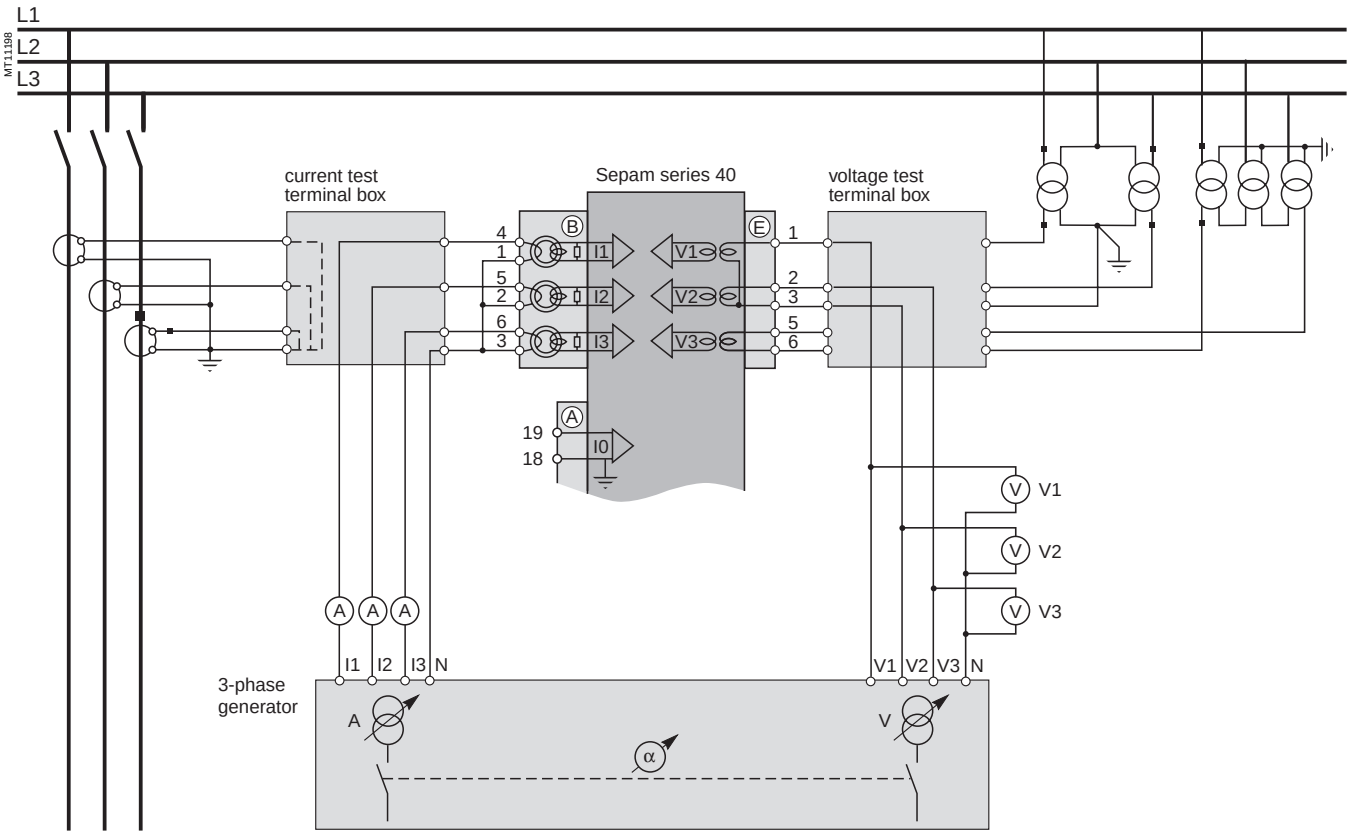

■ turn the generator on
■ apply the 3 generator voltages V1-N, V2-N and V3-N, balanced and set to the rated secondary phase-to-neutral voltage of the VTs (i.e. Vns = Uns/$\sqrt{3}$)
■ inject the 3 generator currents I1, I2 and I3, balanced and set to the rated secondary current of the CTs (i.e. 1 A or 5 A) and in phase with the voltages applied (i.e. generator phase displacement:
α1(V1-N, I1) = α2(V2-N, I2) = α3(V3-N, I3) = 0°)
■ use the SFT2841 software to check the following:
□ the value indicated for each of the phase currents I1, I2 and I3 is approximately equal to the rated primary current of the CTs
□ the value indicated for each of the phase-to-neutral voltages V1, V2 and V3 is approximately equal to the rated primary phase-to-neutral voltage of the VT (Vnp = Unp/$\sqrt{3}$)
□ the value indicated for each phase displacement φ1(V1, I1), φ2(V2, I2) and φ3(V3, I3) between currents I1, I2 or I3 and voltages V1, V2 or V3 respectively is approximately equal to 0°
■ turn the generator off.

Checking of phase current and voltage input connection

With single-phase generator and voltages delivered by 3 VTs

Procedure

■ connect the single-phase voltage and current generator to the corresponding test terminal boxes, using the plugs provided, according to the block diagram below:

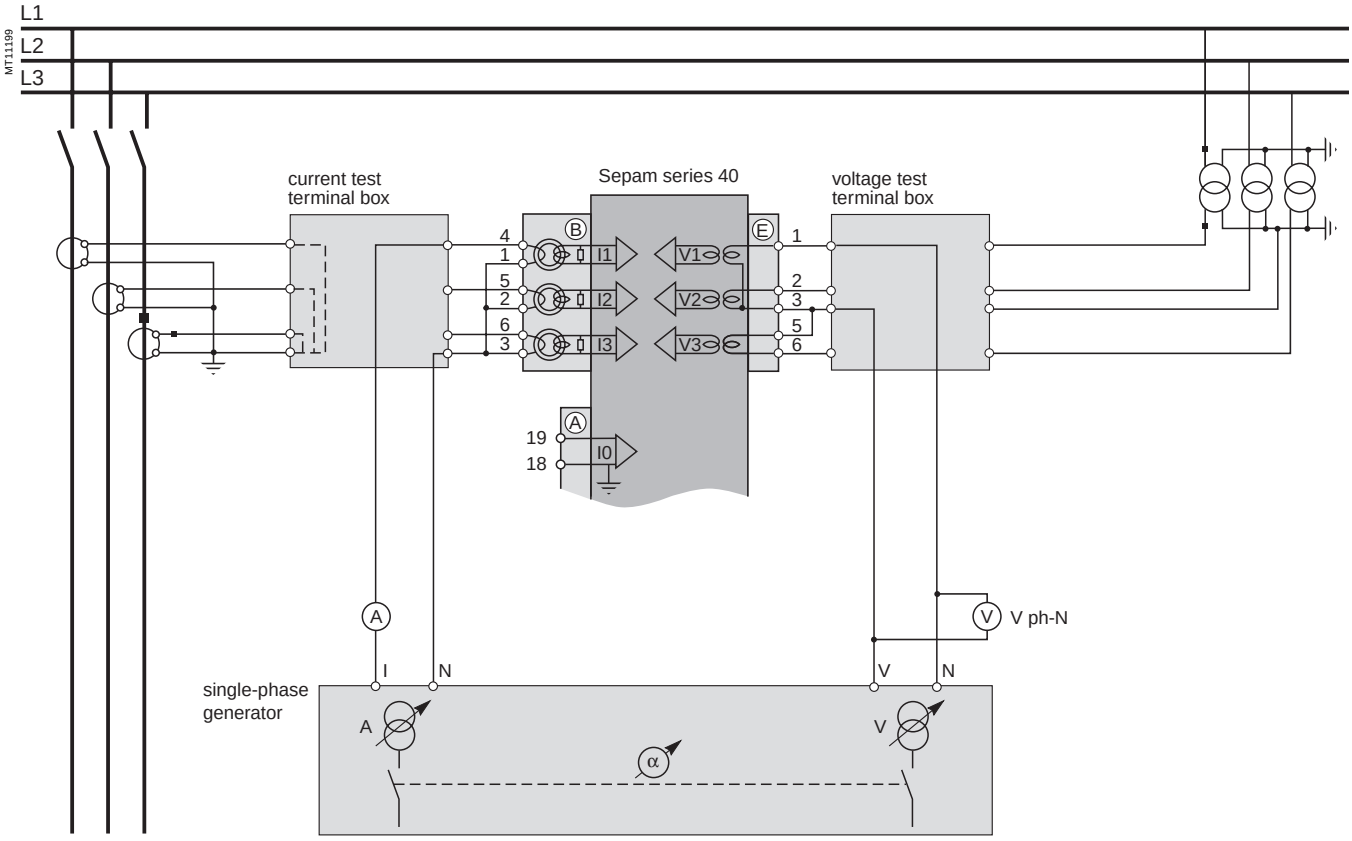

■ turn the generator on

■ apply the generator V-N voltage set to the rated secondary phase-to-neutral voltage of the VTs (i.e. Vns = Uns/$\sqrt{3}$) between Sepam's phase 1 voltage input terminals (via the test box)

■ inject the generator I current, set to the rated secondary current of the CTs (i.e. 1 A or 5 A) and in phase vith the V-N voltage applied (i.e. generator phase displacement α(V-N, I) = 0°) to Sepam's phase 1 current input (via the text box)

■ use the SFT2841 software to check the following:

□ the value indicated for I1 phase current is approximately equal to the rated primary current of the CT

□ the value indicated for V1 phase-to-neutral voltage is approximately equal to the rated primary phase-to-neutral voltage of the VT (Vnp = Unp/$\sqrt{3}$)

□ the value indicated for the phase displacement φ1(V1, I1) between the I1 current and V1 voltage is approximately equal to 0°

■ proceed in the same way by circular permutation with the phase 2 and 3 voltages and currents, to check the I2, V2, φ2(V2, I2) and I3, V3, φ3(V3, I3) values

□ turn the generator off.

Checking of phase current and voltage input connection

With single-phase generator and voltages delivered by 2 VTs

Description

Check to be carried out when the voltages are supplied by a 2 VT assembly, with the VT primary circuits connected between phases of the distributed voltage, which means that the residual voltage is obtained outside Sepam (by 3 VTs connected via their secondary circuits in an open delta arrangement) or, when applicable, is not used for the protection function.

Procedure

■ connect the single-phase voltage and current generator to the corresponding test terminal boxes, using the plugs provided, according to the block diagram below:

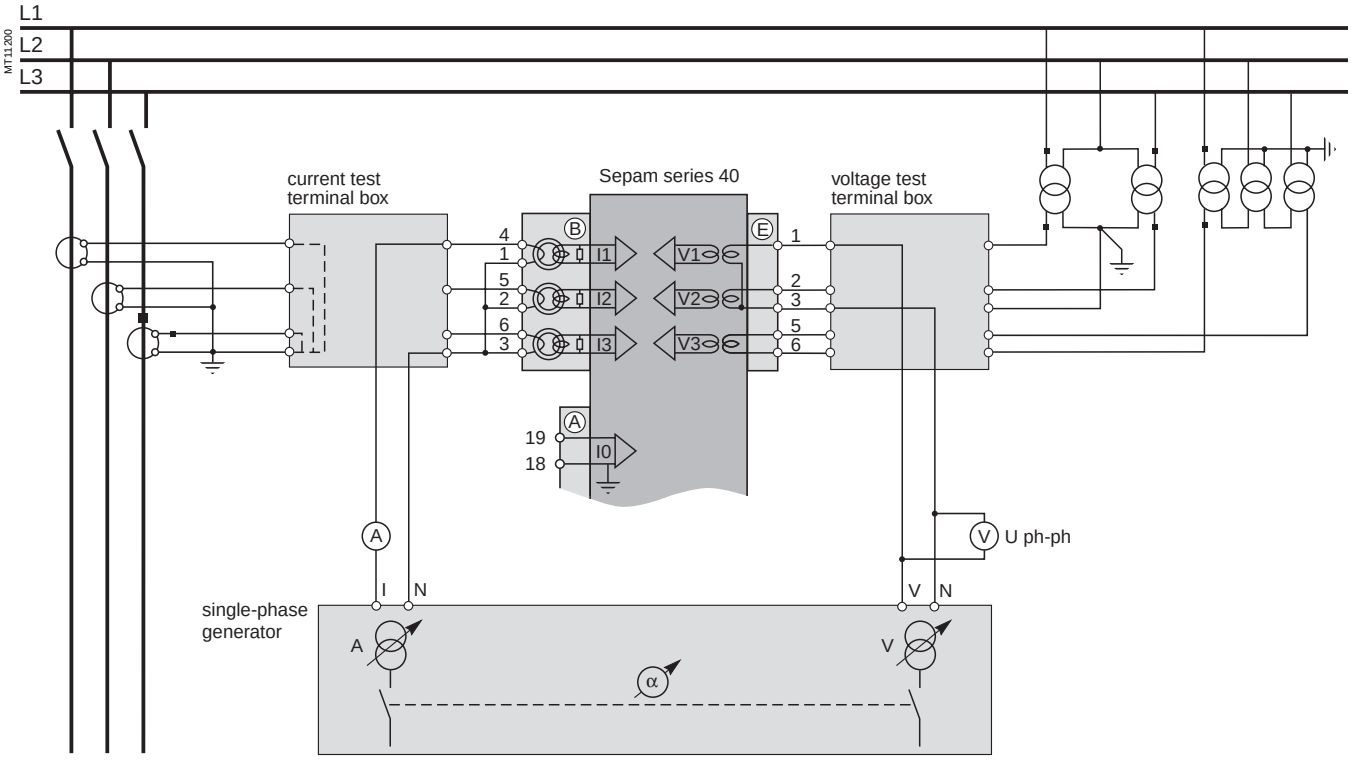

■ turn the generator on

■ apply (via the test box) the voltage delivered at the V-N terminals of the generator, set to $\sqrt{3}/2$ times the rated secondary phase-to-phase voltage of the VTs (i.e. $\sqrt{3}$ Uns/2) between terminals 1-3 of Sepam's voltage inputs

■ inject the generator I current, set to the rated secondary current of the CTs (i.e. 1 A or 5 A) and in phase with the V-N voltage applied (i.e. generator phase displacement α(V-N, I) = 0°) to Sepam's phase 1 current input (via the test box)

■ use the SFT2841 software to check the following:

□ the value indicated for I1 phase current is approximately equal to the rated primary current of the CT (Inp)

□ the value indicated for V1 phase-to-neutral voltage is approximately equal to the rated primary phase-to-neutral voltage of the VT (Vnp = Unp/$\sqrt{3}$)

□ the value indicated for the phase displacement φ1(V1, I1) between the I1 current and V1 voltage is approximately equal to 0°

■ proceed in the same way to check the I2, V2, φ2(V2, I2) values:

□ apply the generator V-N voltage set to $\sqrt{3}$ Uns/2 in parallel between terminals 1-3 and 2-3 of Sepam's voltage inputs (via the test box)

□ inject an I current set to 1 A or 5 A and in phase opposition with the V-N voltage (i.e. α(V-N, I) = 180°) to Sepam's phase 2 current input (via the test box)

□ obtain I2 ≅ Inp, V2 ≅ Vnp = Unp/$\sqrt{3}$ and φ2 ≅ 0°

■ check the I3, V3, φ3(V3, I3) values as well:

□ apply the generator V-N voltage set to $\sqrt{3}$ Uns/2 between terminals 2-3 of Sepam's voltage inputs (via the test box)

□ inject a current equal to 1 A or 5 A and in phase with the V-N voltage (i.e. α(V-N, I) = 0°) to Sepam's phase 3 current input (via the test box)

□ obtain I3 ≅ Inp, V3 ≅ Vnp = Unp/$\sqrt{3}$ and φ3 ≅ 0°

■ turn the generator off.

Checking of residual current input connection

Description

Check to be carried out when the residual current is measured by a specific sensor such as:

- CSH120 or CSH200 core balance CT
- CSH30 interposing ring CT (whether it is installed on the secondary circuit of a single 1 A or 5 A CT which encompasses the 3 phases, or on the neutral connection of the three 1 A or 5 A phase CTs)
- other core balance CT connected to an ACE990 interface,

and when the residual voltage is calculated in Sepam or cannot be calculated (and is therefore not available for the protection function).

Procedure

- connect according to the diagram below:
  - a wire between the generator current terminals to inject current into the primary circuit of the core balance CT or CT, with the wire passing through the core balance CT or CT in the P1-P2 direction, with P1 the busbar end and P2 the cable end
  - when applicable, the generator voltage terminals to the voltage test terminal box, so as to only supply Sepam's phase 1 voltage input and therefore obtain a residual voltage V0 = V1

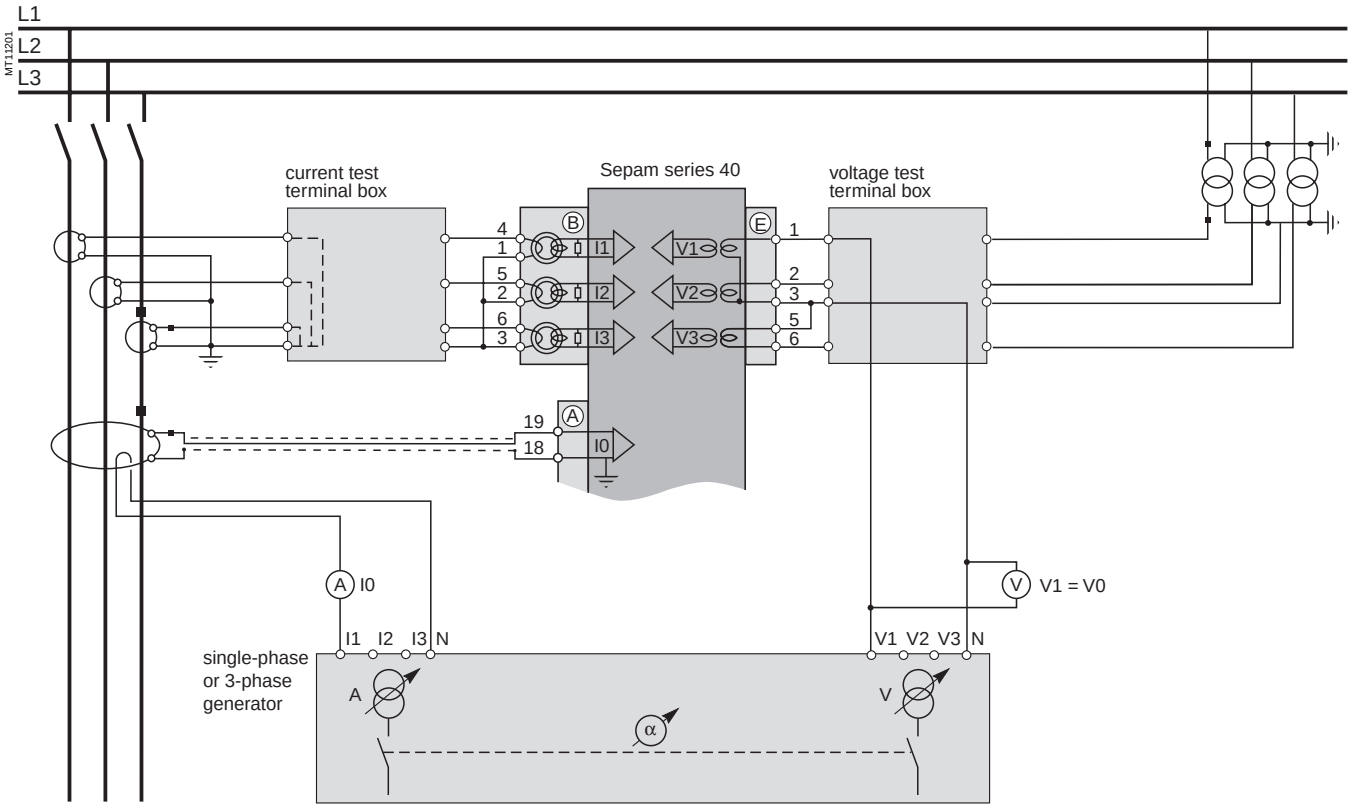

- turn the generator on
- when applicable, apply a V-N voltage set to the rated secondary phase-to-neutral voltage of the VT (i.e. Vns = Uns/$\sqrt{3}$)
- inject an I current set to 5 A, and when applicable in phase with the V-N voltage applied (i.e. generator phase displacement α(V-N, I) = 0°)
- use the SFT2841 software to check the following:
  - the value indicated for the measured I0 residual current is approximately equal to 5 A
  - when applicable, the value indicated for calculated V0 residual voltage is approximately equal to the rated primary phase-to-neutral voltage of the VTs (i.e. Vnp = Unp/$\sqrt{3}$)
  - when applicable, the value indicated for the phase displacement φ0(V0, I0) between the I0 current and V0 voltage is approximately equal to 0°
- turn the generator off.

Checking of residual voltage input connection

Description

Check to be carried out when the residual voltage is delivered by 3 VTs on the secondary circuits connected in an open delta assembly, and when the residual current is calculated in Sepam or, when applicable, is not used for the protection function.

Procedure

■ connect according to the diagram below:

□ the generator voltage terminals to the voltage test terminal box, so as to only supply Sepam's residual voltage input

□ when applicable, the generator current terminals to the current test terminal box, so as to only supply Sepam's phase 1 current input, and therefore obtain a residual current I0Σ = I1

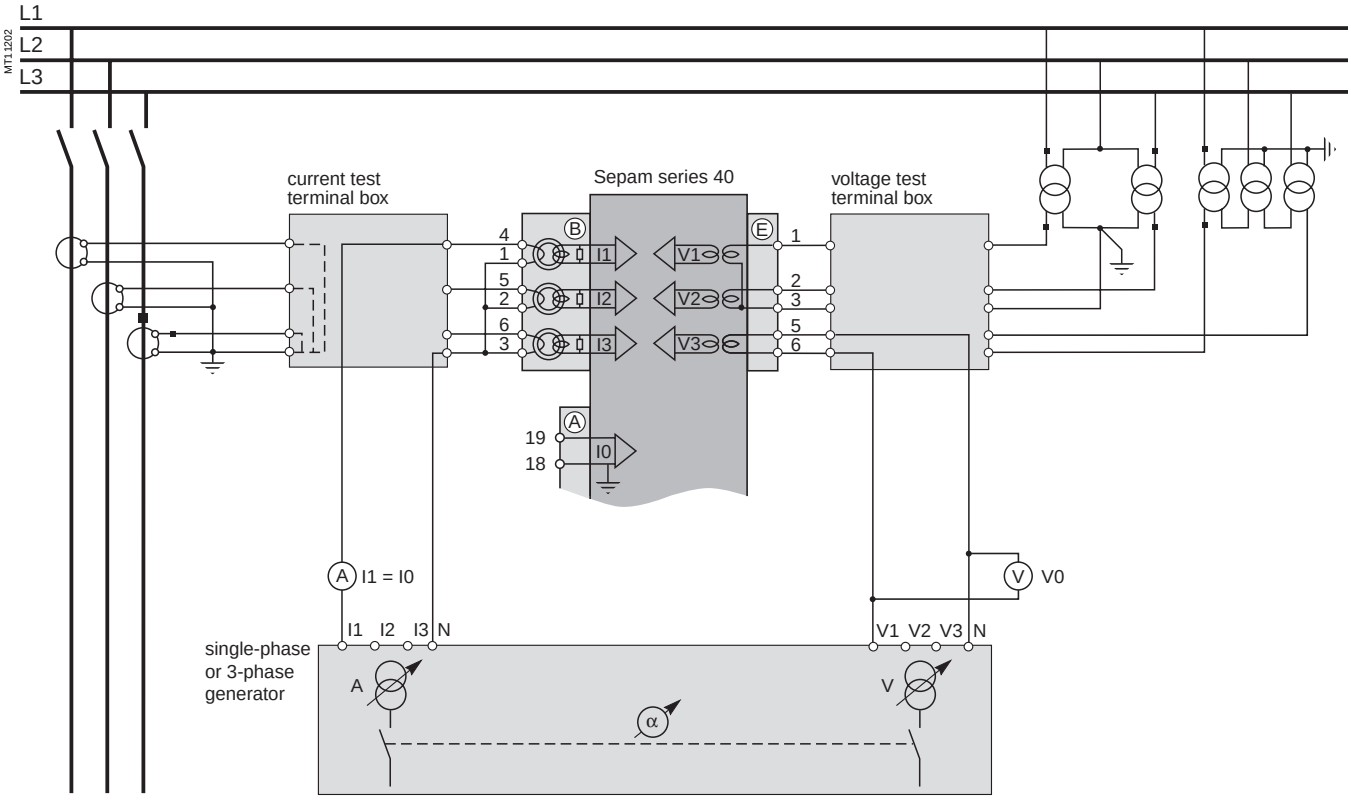

■ turn the generator on

■ apply a V-N voltage set to the rated secondary voltage of the VTs installed in an open delta arrangement (i.e., depending on the case, Uns/$\sqrt{3}$ or Uns/3)

■ when applicable, inject an I current set to the rated secondary current of the CTs (i.e. 1 A or 5 A) and in phase with the voltage applied (i.e. generator phase displacement α(V-N, I) = 0°)

■ use the SFT2841 software to check the following:

□ the value indicated for the measured V0 residual voltage is approximately equal to the rated primary phase-to-neutral voltage of the VTs (i.e. Vnp = Unp/$\sqrt{3}$)

□ when applicable, the value indicated for the calculated I0Σ residual current is approximately equal to the rated primary current of the CTs

□ when applicable, the value indicated for the phase displacement φ0Σ (V0, I0Σ) between the I0Σ current and V0 voltage is approximately equal to 0°

■ turn the generator off.

Checking of residual current and residual voltage input connection

Description

Check to be carried out when the residual voltage is delivered by 3 VTs on the secondary circuits connected in an open delta assembly and when the residual current is obtained by a specific sensor such as:

- CSH120 or CSH200 core balance CT
- CSH30 interposing ring CT (whether it is installed on the secondary circuit of a single 1 A or 5 A CT which encompasses the 3 phases, or on the neutral connection of the three 1 A or 5 A phase CTs)
- other core balance CT connected to an ACE990 interface

Procedure

- connect according to the diagram below:
  - the generator voltage terminals to the voltage test terminal box using the plug provided,
  - a wire between the generator current terminals to inject current into the primary circuit of the core balance CT or CT, with the wire passing through the core balance CT or CT in the P1-P2 direction, with P1 the busbar end and P2 the cable end

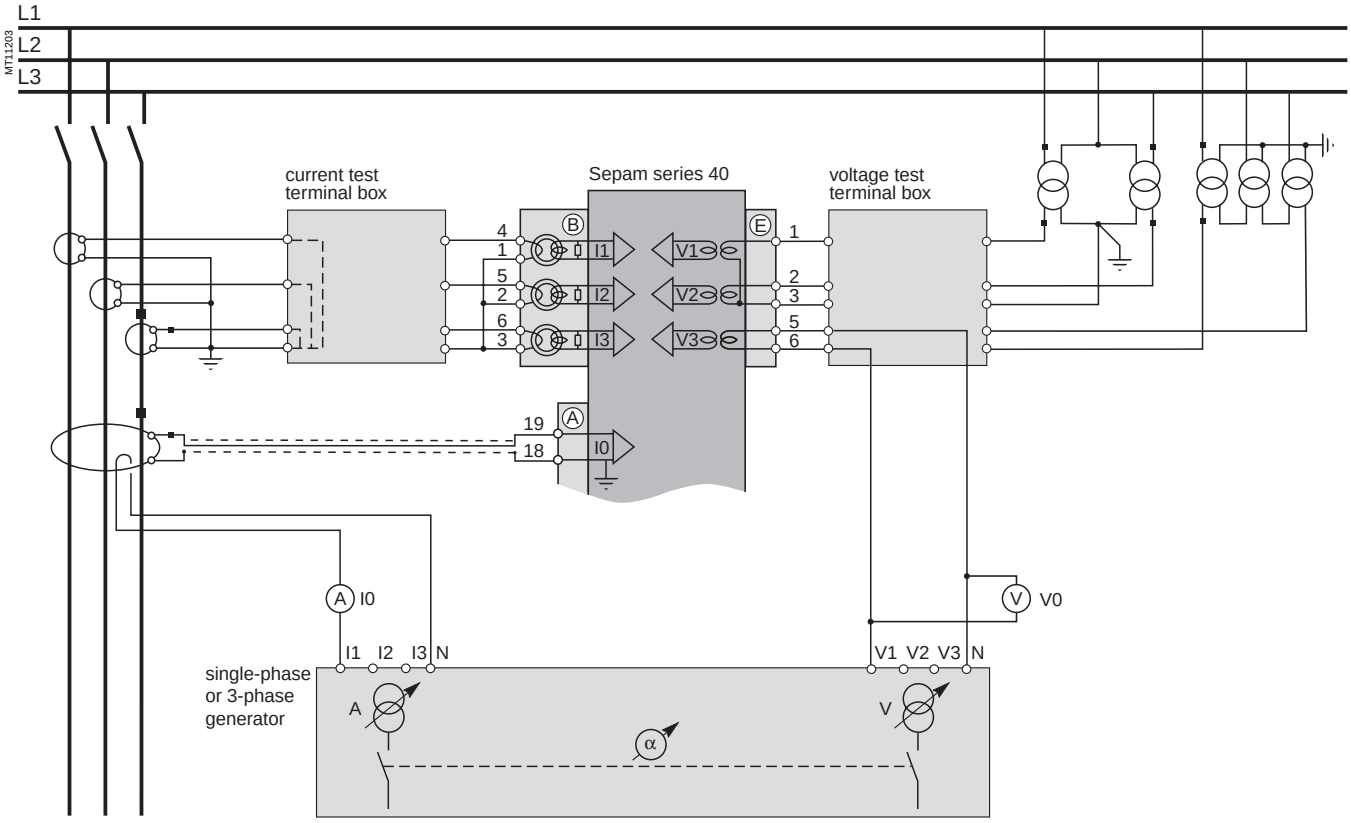

- turn the generator on
- apply a V-N voltage set to the rated secondary voltage of the VTs connected in an open delta arrangement (i.e. Uns/$\sqrt{3}$ or Uns/3)
- inject an I current set to 5 A, and in phase with the voltage applied (i.e. generator phase displacement α(V-N, I) = 0°)
- use the SFT2841 software to check the following:
  - the value indicated for the measured I0 residual current is approximately equal to 5 A
  - the value indicated for the measured V0 residual voltage is approximately equal to the rated primary phase-to-neutral voltage of the VTs (i.e. Vnp = Unp/$\sqrt{3}$)
  - the value indicated for the phase displacement φ0(V0, I0) between the I0 current and V0 voltage is approximatelyequal to 0°
- turn the generator off.

Checking of logic input and output connection

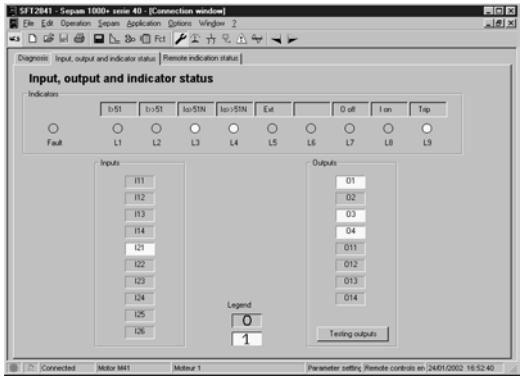

"Input, output, indicator status" screen.

Checking of logic input connection

Procedure

Proceed as follows for each input:

- **if the input supply voltage is present,** use an electric cord to short-circuit the contact that delivers logic data to the input
- **if the input supply voltage is not present,** apply a voltage supplied by the DC voltage generator to the terminal of the contact linked to the chosen input, being sure to comply with the suitable polarity and level
- **observe the change of status of the input** using the SFT2841 software, in the "Input, output, indicator status" screen
- at the end of the test, if necessary, press the SFT2841 Reset key to clear all messages and deactivate all outputs.

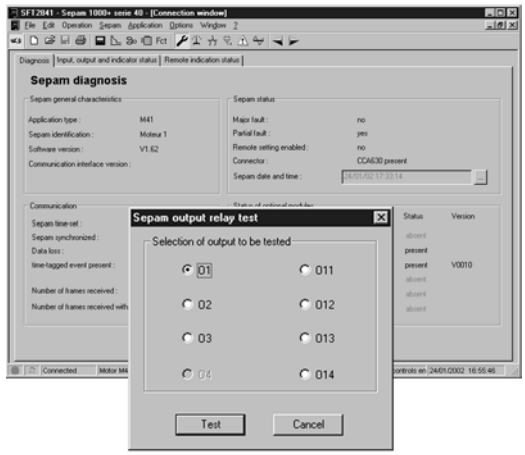

"Sepam diagnosis and output relay test" screen.

Checking of logic output connection

Procedure

Check carried out using the "Output relay test" function, activated via the SFT2841 software, in the "Sepam Diagnosis" screen.
Only output O4, when used for the watchdog, can be tested.
This function requires prior entry of the "Parameter setting" password.

- activate each output relay using the buttons in the SFT2841 software
- the activated output relay changes status over a period of 5 seconds
- observe the change of status of the output relay through the operation of the related switchgear (if it is ready to operate and is powered), or connect a voltmeter to the terminals of the output contact (the voltage cancels itself out when the contact closes)
- at the end of the test, press the SFT2841 Reset key to clear all messages and deactivate all outputs.

Validation of the complete protection chain and customized logical functions

Principle

The complete protection chain is validated during the simulation of a fault that causes tripping of the breaking device by Sepam.

Procedure

- select one of the protection functions that triggers tripping of the breaking device and separately, according to their incidence in the chain, the function or functions related to the programmed or reprogrammed parts of the program logic
- according to the selected function or functions, inject a current and/or apply a voltage that corresponds to a fault
- observe the tripping of the breaking device and the operation of the adapted parts of the program logic.

At the end of all the voltage and current application type checks, put the covers back on the test terminal boxes.

Checking of optional module connection

Checking of RTD inputs to the MET148-2 module

The temperature monitoring function provided by Sepam T40, T42, M41 and G40 units checks the connection of each RTD that is configured.
An "RTD FAULT" alarm is generated whenever one of the RTDs is detected as being short-circuted or disconnected (absent).
To identify the faulty RTD or RTDs:

- display the temperature values measured by Sepam using the SFT2841 software
- check the consistency of the temperatures measured:
  - the temperature displayed is "****" if the RTD is short-circuited (T < -35 °C)
  - the temperature displayed is "-****" if the RTD is disconnected (T > 205 °C).

Checking of analog output connection to the MSA141 module

- identify the measurement associated by parameter setting to the analog output using the SFT2841 software
- simulate, if necessary, the measurement linked to the analog output by injection
- check the consistency between the value measured by Sepam and the indication given by the device connected to the analog output.

Test sheet
Sepam series 40

Project: ..... **Type of Sepam** ☐☐☐

Switchboard: ..... **Serial number** ☐☐☐☐☐☐☐

Cubicle: ..... **Software version** V☐☐☐☐

Overall checks

Check off the box ☐ when the check has been made and been conclusive

Type of check	
Preliminary general examination, prior to energizing	☐
Energizing	☐
Parameter and protection settings	☐
Logic input connection	☐
Logic output connection	☐
Validation of the complete protection chain	☐
Validation of the customized logical functions (if necessary)	☐
Analog output connection to the MSA141 module (if necessary)	☐
Temperature sensor input connection to the MET148-2 module (for type T40, T42, M41, G40))	☐

Checking of phase current and voltage inputs

Check off the box ☐ when the check has been made and been conclusive

Type of check	Test performed	Result	Display	
Phase current and phase voltage input connection	Secondary injection of CT rated current, i.e. 1 A or 5 A	CT rated primary current	I1 = ...	☐
			I2 = ...	
			I3 = ...	
	Secondary injection of phase voltage (the value to be injected depends on the test being performed)	VT rated primary phase-to-neutral voltage Uns/$\sqrt{3}$	V1 = ...	☐
			V2 = ...	
			V3 = ...	
		Phase displacement φ(V, I) ≈ 0°	φ1 = ...	☐
			φ2 = ...	
			φ3 = ...	

Tests performed on:	**Signatures**
By:.....	

Comments:

.....

.....

.....

Project: ..... **Type of Sepam** ☐☐☐

Switchboard: ..... **Serial number** ☐☐☐☐☐☐☐

Cubicle: ..... **Software version** V☐☐☐☐

Checking of residual current and residual voltage inputs

Check off the box ☐ when the check has been made and been conclusive

Type of check	Test performed	Result	Display
Residual current input connection	Injection of 5 A into the core balance CT primary circuit	Injected current value	I0 =..... ☐
	When applicable, secondary injection of the rated phase-to-neutral voltage of a phase VT Uns/√3	VT rated primary phase-to-neutral voltage Unp/√3	V0 = ...
		Phase displacement φ (V0, I0) ≈ 0°	φ0 =.....
Residual voltage input connection	Secondary injection of the rated voltage of the VTs in an open delta arrangement (Uns/√3 or Uns/3)	VT rated primary phase-to-neutral voltage Unp/√3	V0 = ... ☐
	When applicable, secondary injection of CT rated current, i.e. 1 A or 5 A	CT rated primary current	I0 =.....
		Phase displacement φ (V0, I0) ≈ 0°	φ0 =.....
Residual current and residual voltage input connection	Injection of 5 A into the core balance CT primary circuit	Injected current value	I0 =..... ☐
	Secondary injection of the rated voltage of the VTs in an open delta arrangement (Uns/√3 or Uns/3)	VT rated primary phase-to-neutral voltage Unp/√3	V0 = ...
		Phase displacement φ (V0, I0) ≈ 0°	φ0 =.....

Tests performed on:	**Signatures**
By:	

Comments:

.....

.....

.....

Maintenance

Sepam has a large number of self-tests that are carried out in the base unit and additional modules. The purpose of the self-tests is:
■ to detect failures that may lead to nuisance tripping or the failure to trip when a fault occurs
■ to put Sepam in the fail-safe position to avoid user errors
■ to notify the operator that a maintenance operation is required.
The "Sepam diagnosis" screen of the SFT2841 software provides access to data on the status of the base unit and optional modules.

MT11196

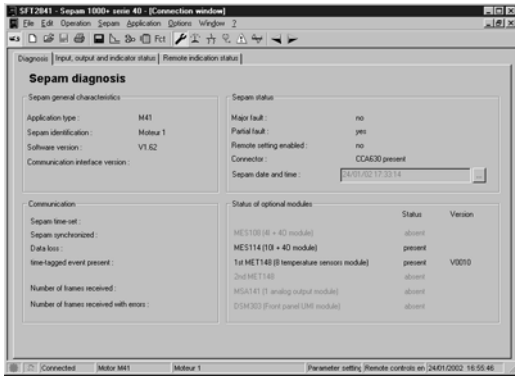

Sepam Diagnosis" screen.

Shutdown of the base unit in fail-safe position

The base unit goes into the fail-safe position in the following conditions:
■ detection of an internal failure by the self-tests
■ sensor interface connector missing (CCA630 or CCA670)
■ no connection of one of the 3 LPCT sensors to the CCA670 (connectors L1, L2 and L3)
■ MES module configured but missing.
The fail-safe position is conveyed by:
■ ON indicator on
■ indicator on the base unit steadily on
■ relay O4 "watchdog" in fault position
■ output relays dropped out
■ all protection units inhibited
■ display showing fault message

01

■ indicator on DSM303 module (remote advanced UMI option) flashing.

Downgraded operation

The base unit is in working order (all the protection functions activated are operational) and indicates that one of the optional modules such as DSM303, MET148-2 or MSA141 is faulty or else that a module is configured but not connected.
According to the model, this operating mode is conveyed by:
■ Sepam with integrated advanced UMI (MD base):
□ ON indicator on
□ indicator on the base unit flashing, including when the display is out of order (off)
□ indicator on the MET or MSA module faulty, steadily on.
The display shows a partial fault message and indicates the type of fault by a code:
□ code 1: inter-module link fault
□ code 3: MET module unavailable
□ code 4: MSA module unavailable.
■ Sepam with remote advanced UMI, MX base + DSM303:
□ ON indicator on
□ indicator on the base unit flashing
□ indicator on the MET or MSA module faulty, steadily on
□ the display indicates the type of fault by a code (same as above).
Special case of faulty DSM303:
□ ON indicator on
□ indicator on base unit flashing
□ indicator on DSM steadily on
□ display off.
This Sepam operating mode is also transmitted via the communication link.

RTD fault

Each temperature monitoring function, when activated, detects whether the RTD associated with the MET148-2 module is short-circuited or disconnected.
When this is the case, the alarm message "RTD FAULT" is generated.
Since this alarm is common to the 8 functions, the identification of the faulty RTD or RTDs is obtained by looking up the measured values:
■ measurement displayed "****" if the sensor is short-circuited (T < -35 °C)
■ measurement displayed "-****" if the sensor is disconnected (or T > +205 °C)

Other faults

Specific faults indicated by a screen:
■ DSM303 version incompatible (if version < V0146).

Replacement and repair

When Sepam or a module is considered to be faulty, have it replaced by a new product or module, since the components cannot be repaired.

Notes

Notes

Schneider Electric Industries SAS
Postal address:
Electrical Distribution Communication
38050 Grenoble cedex 9 - France
Tel : +33 (0)4 76 57 60 60

http://www.schneider-electric.com
http://www.sepamrelay.com

As standards, specifications and designs change from time to time, please ask for confirmation of the information given in this document.

This document has been printed on ecological paper.

Publishing: AMEG
Production: Schneider Electric
Printing: Imprimerie des Deux Ponts

PCRED301006EN/2
ART.08556

04-2003